Parts Breakdown

UH6570

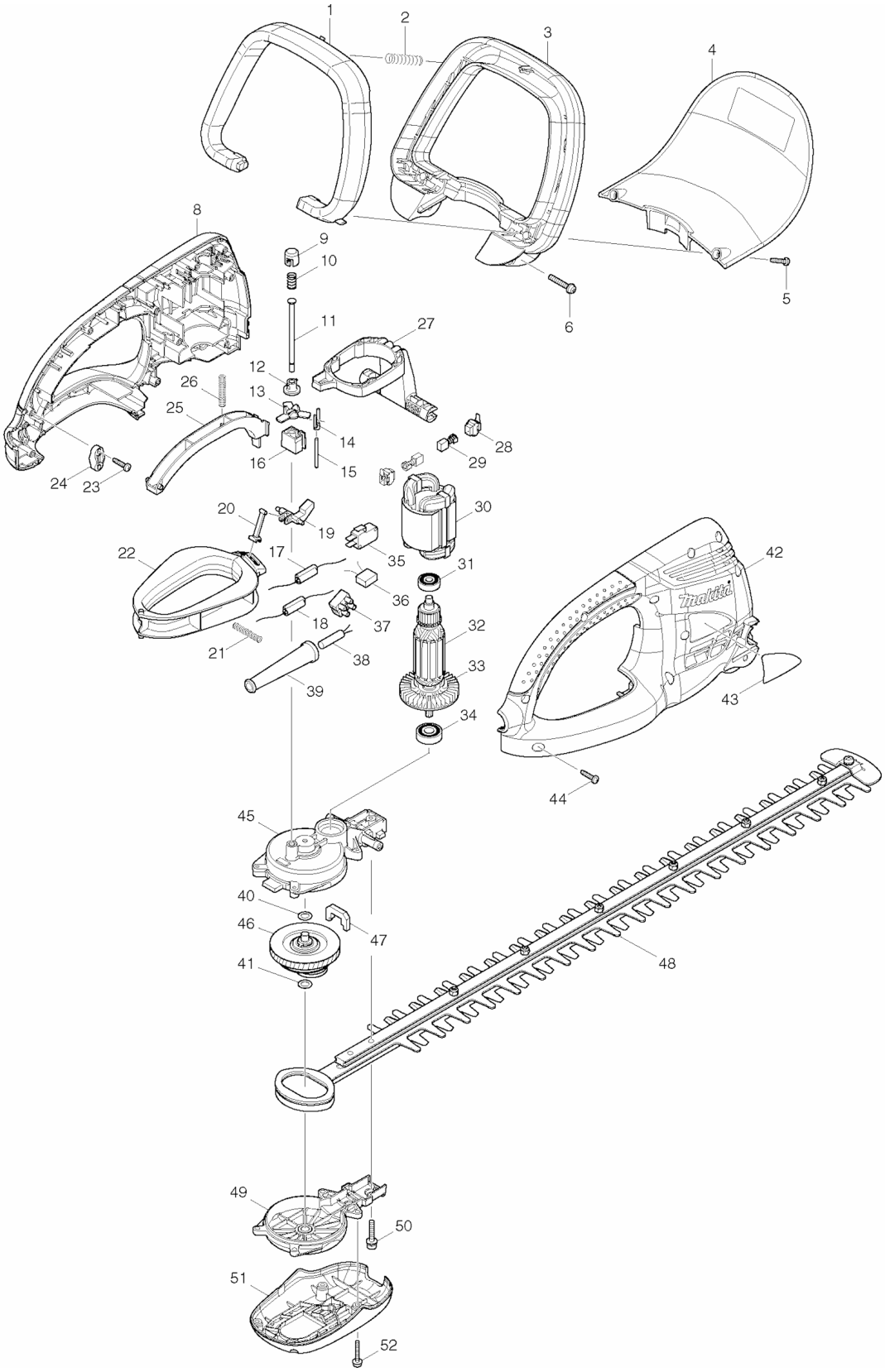

Parts Breakdown

UH6570

Products with multiple versions are listed in subsiding order with the newest version on top not indented

Fig #	Part ID	Part Name	Quantity
1	450444-8	SWITCH LEVER B, UH5570	1
2	233157-4	COMPRESSION SPRING 9, UH5570	1
3	450442-2	FRONT GRIP, UH5570	1
4	158912-2	PROTECTOR CPL., UH5570	1
5	265995-6	TAPPING SCREW 4X18, BO4556K	2
6	911253-5	P.H. SCREW M5X30, 2030S	2
8	188567-9	HOUSING SET, UH5570	1
9	417740-7	INSULATION CAP, UH5570	1
10	233288-9	COMPRESSION SPRING 8, UH5570	1
11	268077-3	PIN 5, UH5570	1
12	417727-9	CAP HOLDER, UH5570	1
13	417736-8	LIFTER, UH5570	1
14	417735-0	PUSHER CAP, UH5570	1
15	268237-7	ROD 3, UH5570	1
16	417781-3	PIN HOLDER, UH5570	1
19	417737-6	LINK, UH5570	1
20	417739-2	ROD, UH5570	1
21	233156-6	COMPRESSION SPRING 5, UH5570	1
22	417731-8	SWITCH LEVER C, UH5570	1
23	265995-6	TAPPING SCREW 4X18, BO4556K	2
24	687063-9	STRAIN RELIEF, 4323K	1
25	450443-0	SWITCH LEVER A, UH5570	1
26	233156-6	COMPRESSION SPRING 5, UH5570	1
27	450488-8	LEVER, UH5570	1
28	643935-8	BRUSH HOLDER, UH5570	2
29	CB407	CARBON BRUSH SET, 195007-0	1
	195007-0	CARBON BRUSH SET, 195007-0	
	191927-6	CARBON BRUSH SET CB-407, BO5030K	
30	621731-4	FIELD, UH5570	1
31	211027-7	BALL BEARING 627ZZ, UH5570	1
32	515736-3	ARMATURE ASSEMBLY, UH5570	1
33	241850-6	FAN 60, BTW450	1
34	211062-5	B. BEARING 6000ZZ, LS1016L	1
35	650628-0	SWITCH 1005.1004, UH5570	1
	650608-6	SWITCH D3B6-V1AA, UH5570	
37	654531-7	TERMINAL BLOCK 2P, 5007MG	1
38	660293-7	POWER SUPPLY CORD, UH5570	1
39	682503-2	CORD GUARD 8-90, 9903	1
40	253215-0	F. WASHER 8, PV7001C	1
41	253215-0	F. WASHER 8, PV7001C	1
42	188567-9	HOUSING SET, UH5570	1
43	865757-8	NAME PLATE, UH6570	1
44	265995-6	TAPPING SCREW 4X18, BO4556K	10
45	158625-5	GEAR HOUSING CPL., UH5570	1
46	158624-7	GEAR CPL., UH5570	1
47	443142-1	DUST GUARD, UH5570	1
48	194669-1	SHEAR BLADE ASSEMBLY SET, UH6570	1
49	158626-3	GEAR HOUSING COVER CPL., UH5570	1
50	265182-7	+ PAN HEAD SCREW M5X25, UH5570	2
51	450441-4	UNDER COVER, UH5570	1
52	911148-2	P.H. SCREW M4X25, 5057KB	4
	194677-2	CORD HOLDER CPL. SET, UH5570	1
	158024-1	HOOK CPL., UC3530A	1
	450490-1	BLADE COVER, UH5570	1
	158932-6	WARNING CARD CPL., UH5570	1