Parts Breakdown

LXPH01

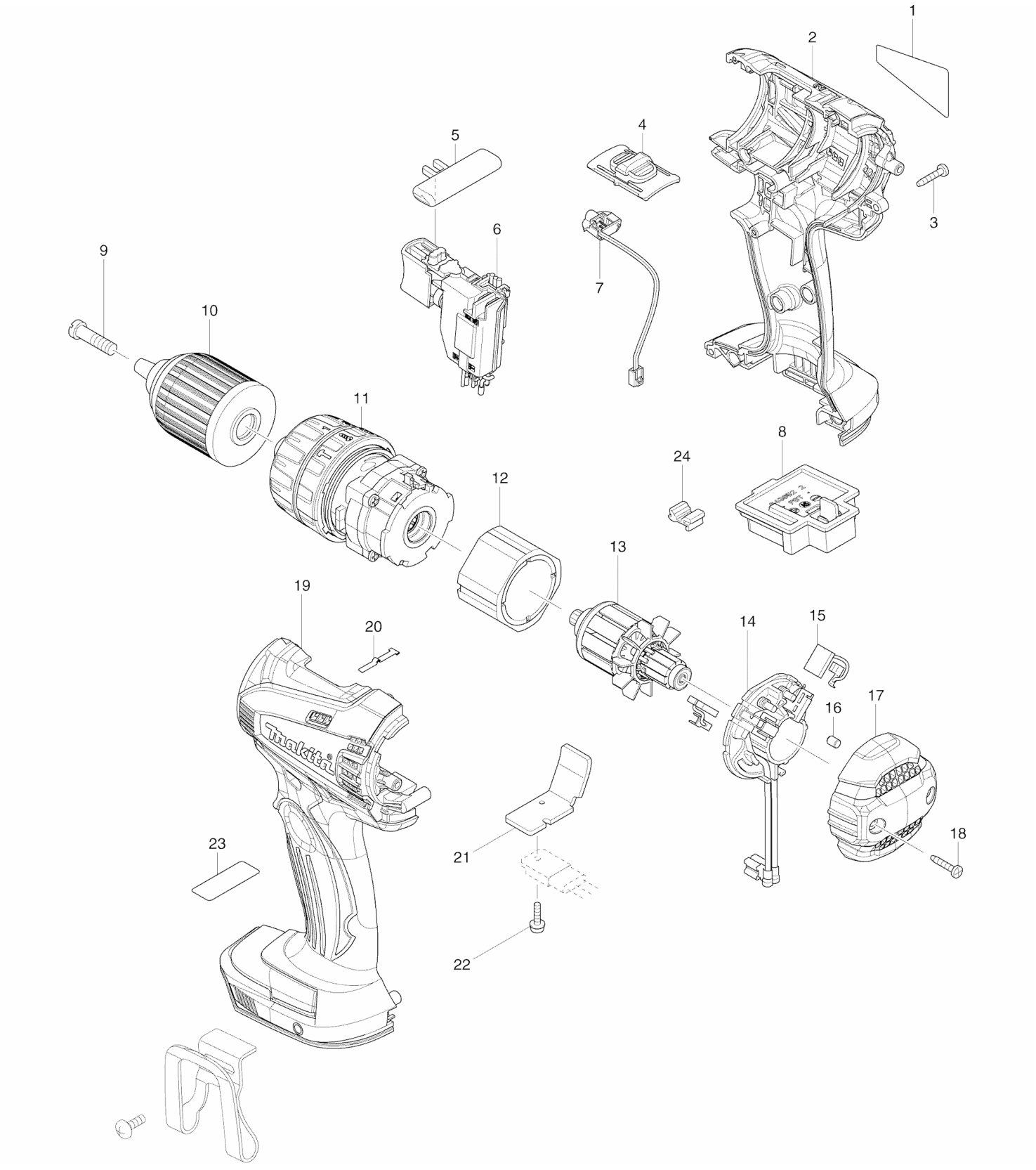

Parts Breakdown

LXPH01

Products with multiple versions are listed in subsiding order with the newest version on top not indented

Fig #	Part ID	Part Name	Quantity
1	868980-4	NAME PLATE, LXPH01	1
2	188970-4	HOUSING SET, LXPH01CW	1
3	266429-2	TAPPING SCREW 3X16, BCL180ZW	9
4	126289-3	SPEED CHANGE LEVER ASS'Y, LXFD01	1
	125832-5	SPEED CHANGE LEVER ASSEMBLY, LXFD01CW	
5	419250-0	F/R CHANGE LEVER, LXPH03	1
6	650637-9	SWITCH, LXFD01CW	1
7	620012-3	LED CIRCUIT, LXFD01CW	1
8	643852-2	TERMINAL, LXFD01CW	1
9	251468-5	F.H. SCREW M6X22, LXPH03	1
10	766008-1	KEYLESS DRILL CHUCK 13, LXFD01CW	1
11	125848-0	GEAR ASS'Y, LXPH01	1
12	638611-7	YOKE UNIT, LXFD01CW	1
13	619263-3	ARMATURE, LXFD01CW	1
14	638494-5	BRUSH HOLDER, LXPH01	1
15	CB440	CARBON BRUSH SET, 195021-6	1
	195021-6	CARBON BRUSH SET, 195021-6	
16	263032-0	RUBBER PIN 4, LXPH03	2
17	452202-8	REAR COVER, LXFD01CW	1
18	266429-2	TAPPING SCREW 3X16, BCL180ZW	2
19	188970-4	HOUSING SET, LXPH01CW	1
20	232182-2	LEAF SPRING, LXPH05	1
21	689170-4	HEAT SINK, LXFD01CW	1
22	911013-5	P.H. SCREW M3X10, LXFD01CW	1
23	891618-6	CAUTION LABEL, LXFD01CW	1
24	424026-2	CUSHION, LXPH03	1
	251314-2	SCREW M4X12, LXPH03	1
	346449-3	BELT HOOK SILM & SHORT FOR CORDLESS TOO	1
	346034-2	HOOK, BDF452HW,BTD142HW & BHP452HW	
	784637-8	PHIL./SLOTTED BIT 2-45, LXFD01CW	1
	821521-7	N/A	1
	824953-7	PLASTIC TOOL CASE, LXFD01CW	
	450128-8	BATTERY COVER FOR 18V/14.4V LI-ION BATTERY	1
	***DC18RA	N/A	1
	BL1815	18V COMPACT LITHIUM-ION BATTERY	2
	195323-0	BATTERY BL1815, LXFD01CW	
	194309-1	BL1815 BATTERY, BDF452HW,1.5AH	