Parts Breakdown

LXOB01

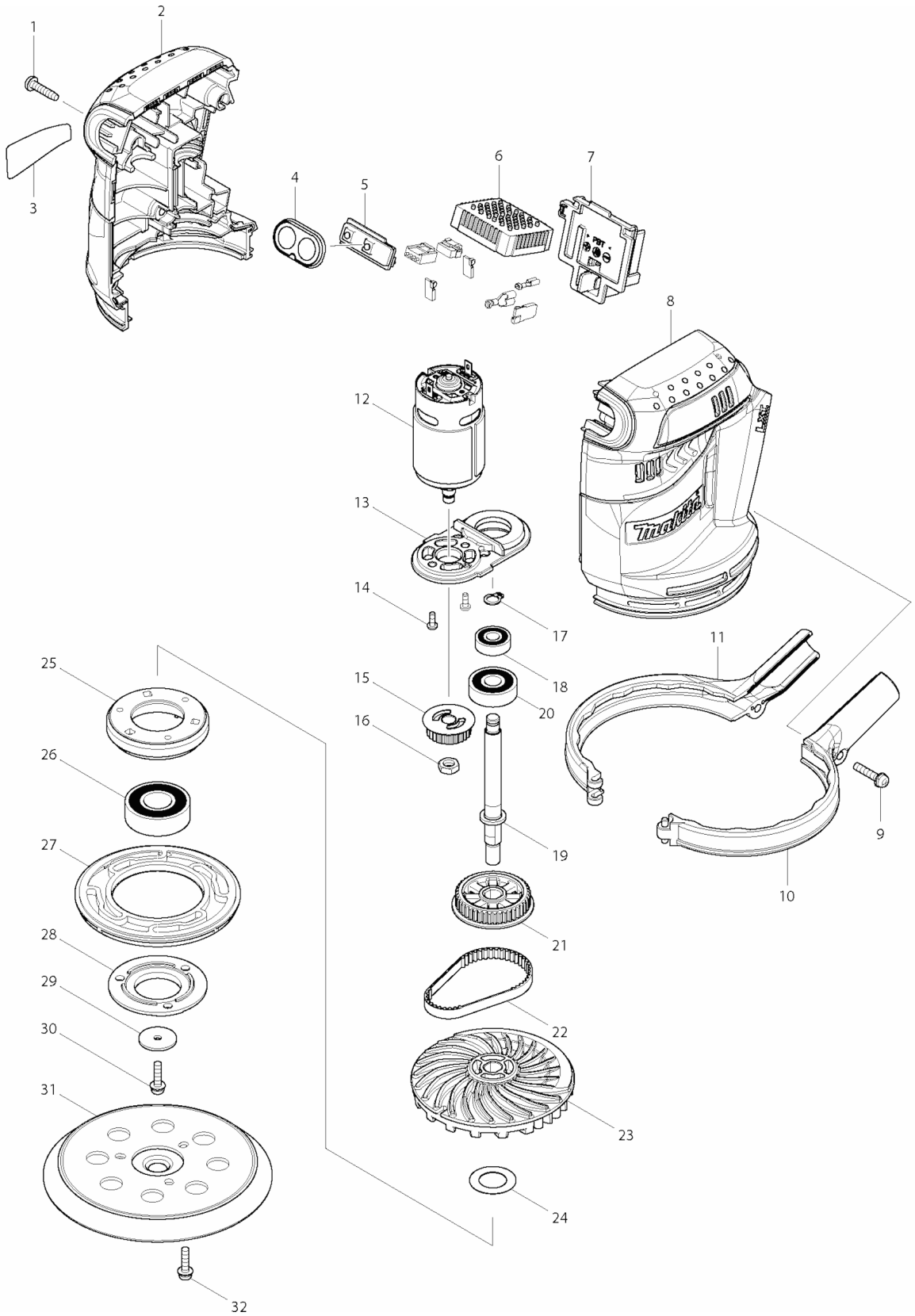

Parts Breakdown

LXOB01

Products with multiple versions are listed in subsiding order with the newest version on top not indented

Fig #	Part ID	Part Name	Quantity
1	265995-6	TAPPING SCREW 4X18, BO4556K	5
2	187424-8	HOUSING SET, LXOB01	1
3	897247-3	NAME PLATE, LXOB01	1
4	141419-5	SWITCH PLATE CPL., LXOB01	1
5	620115-3	SWITCH UNIT, LXOB01	1
6	638789-6	CONTROLLER UNIT, LXOB01	1
7	643859-8	TERMINAL, LXPH03	1
8	187424-8	HOUSING SET, LXOB01	1
9	911138-5	P.H. SCREW M4X20, 9218SB	1
10	187360-8	SKIRT SET, LXOB01	1
12	629952-2	DC MOTOR, LXOB01	1
13	453632-6	MOTOR BRACKET, LXOB01	1
14	265199-0	+ PAN HEAD SCREW M3X8, BCL180ZW	2
15	222175-7	PULLEY 7.5-24.1, LXOB01	1
16	931303-0	HEX NUT M6, 2012	1
17	961003-8	RETAINING RING S-7, 9015B	1
18	210062-2	BALL BEARING 607ZZ, 9550H	1
19	326168-7	SPINDLE, LXOB01	1
20	211092-6	B. BEARING 629DDW, BO4556	1
21	222176-5	PULLEY 7.5-40.3, LXOB01	1
22	225095-4	SYNCHRO BELT 6-174, LXOB01	1
23	240136-5	FAN 88, LXOB01	1
24	267164-5	FLAT WASHER 15, BO5030	1
25	318304-9	BEARING BOX, B5030K	1
26	211228-7	BALL BEARING 6202DDW, HM1303B	1
27	424131-5	BRAKE RING, B05030K	1
28	318303-1	BEARING BOX COVER, B05030K	1
29	253739-6	FLAT WASHER 4, BO5010	1
30	911128-8	P.H. SCREW M4X16, LXPK01	1
31	743081-8	BASE/PAD , BO5030	1
32	911128-8	P.H. SCREW M4X16, LXPK01	3
	166078-4	DUST BAG, BO4556K	1
	257202-1	RING 25, BO4556	1
	416063-0	DUST BAG NOZZLE, BO4556	1
	416064-8	DUST NOZZLE, BO4556	1
	794520-1	5" ABR. D.#120 (5/PKG), BO5001	1
	794544-7	ABRASIVE DISC 125#120, BO5001	
	***DC18RA	N/A	1
	BL1830	18V LXT LITHIUM-ION BATTERY	2
	195324-8	BATTERY BL1830	
	450128-8	BATTERY COVER FOR 18V/14.4V LI-ION BATTERY	1
	831253-8	TOOL BAG, LXOB01	1