Parts Breakdown

LXDT06

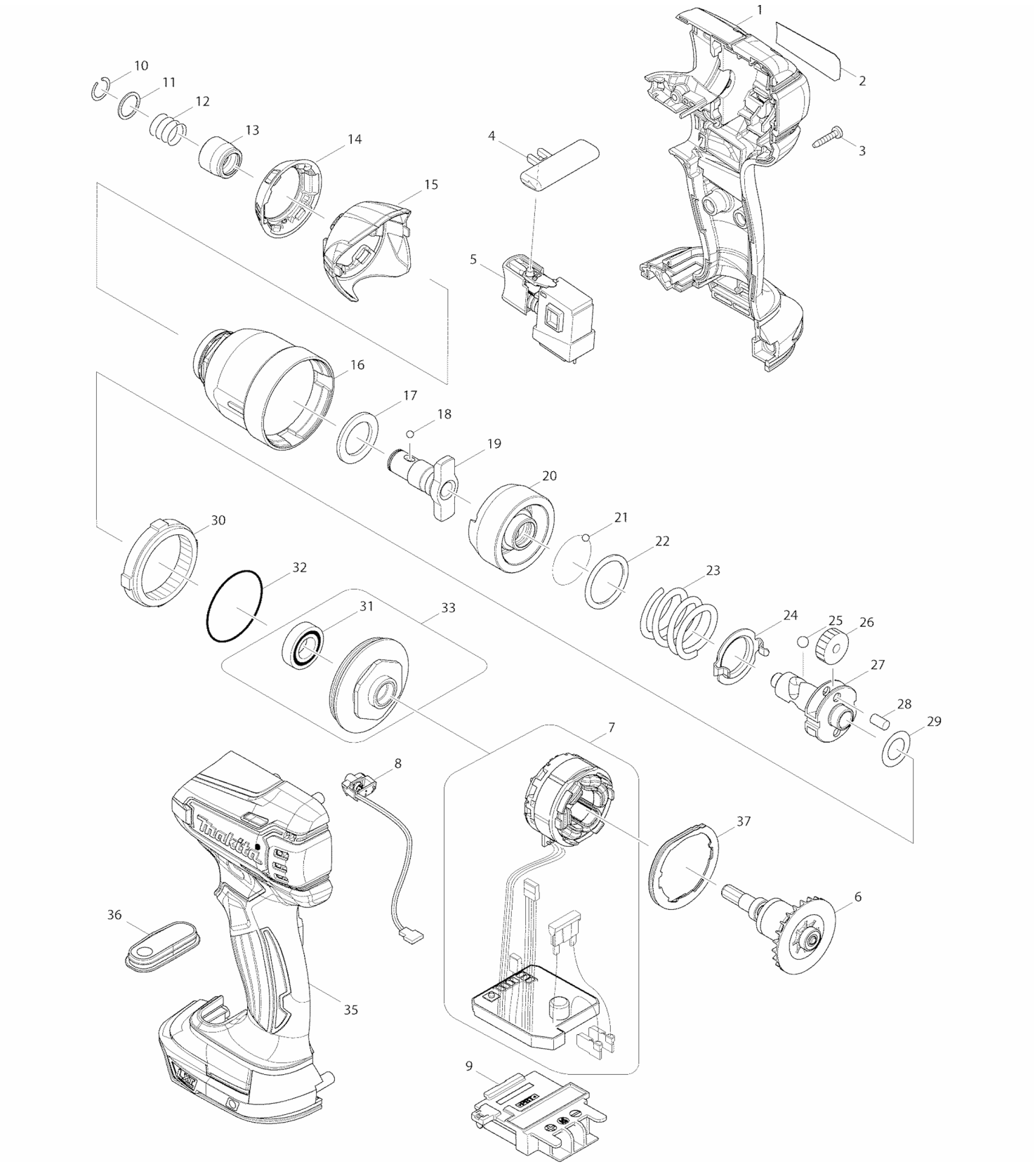

Products with multiple versions are listed in subsiding order with the newest version on top not indented

Fig #	Part ID	Part Name	Quantity
1	187388-6	HOUSING SET, LXDT06	1
2	897175-2	NAME PLATE, LXDT06	1
3	266130-9	TAPPING SCREW PT3X16, LXPH03	9
4	419041-9	F/R CHANGE LEVER, LXDT08	1
5	141448-8	SWITCH CPL., LXDT06	1
6	619297-6	ROTOR, LXDT06	1
7	632A40-2	STATOR UNIT, LXDT06	1
8	620136-5	LED CIRCUIT, LXDT06	1
9	643860-3	TERMINAL, LXPH05	1
10	231951-8	RING SPRING 11, LXDT01	1
11	267085-1	FLAT WASHER 12, LXDT08	1
12	233005-7	COMP.SPRING 13,LXDT01	1
13	326068-1	BIT SLEEVE, LXDT04	1
14	424495-7	BUMPER, LXDT06	1
15	453664-3	HAMMER CASE COVER, LXDT06	1
16	141477-1	HAMMER CASE CPL., LXDT06	1
17	261151-6	NYLON WASHER 19, LXDT04	1
18	216001-0	STEEL BALL 3.5, LXDT08	2
19	326069-9	ANVIL M, LXDT04	1
20	326054-2	HAMMER, LXDT04	1
21	216001-0	STEEL BALL 3.5, LXDT08	24
22	267175-0	FLAT WASHER 24, LXDT08	1
23	234251-5	COMPRESSION SPRING 25, LXDT06	1
24	346466-3	PLATE, LXDT04	1
25	216011-7	STEEL BALL 5.6, LXDT08	2
26	227233-4	SPUR GEAR 22, BTW251	2
27	326066-5	SPINDLE, LXDT04	1
28	256253-1	PIN 5, LXDT08	2
29	253362-7	THIN WASHER 12, LXDT04	1
30	227150-8	INTERNAL GEAR 51, LXDT01	1
31	211140-1	BALL BEARING 6901LLB, LXDT01	1
32	213507-9	O RING 40, LXDT01	1
33	158145-9	BEARING BOX, BTW251	1
35	187388-6	HOUSING SET, LXDT06	1
36	141583-2	SWITCH PLATE CPL., LXDT06	1
37	453665-1	BUFFLE PLATE, LXDT06	1
	346449-3	BELT HOOK SILM & SHORT FOR CORDLESS TOO	1
	266622-8	+ TRUSS HEAD SCREW M4X12, LXDT01	1
	898708-6	CAUTION LABEL, LXDT06	1