Parts Breakdown

KP0810

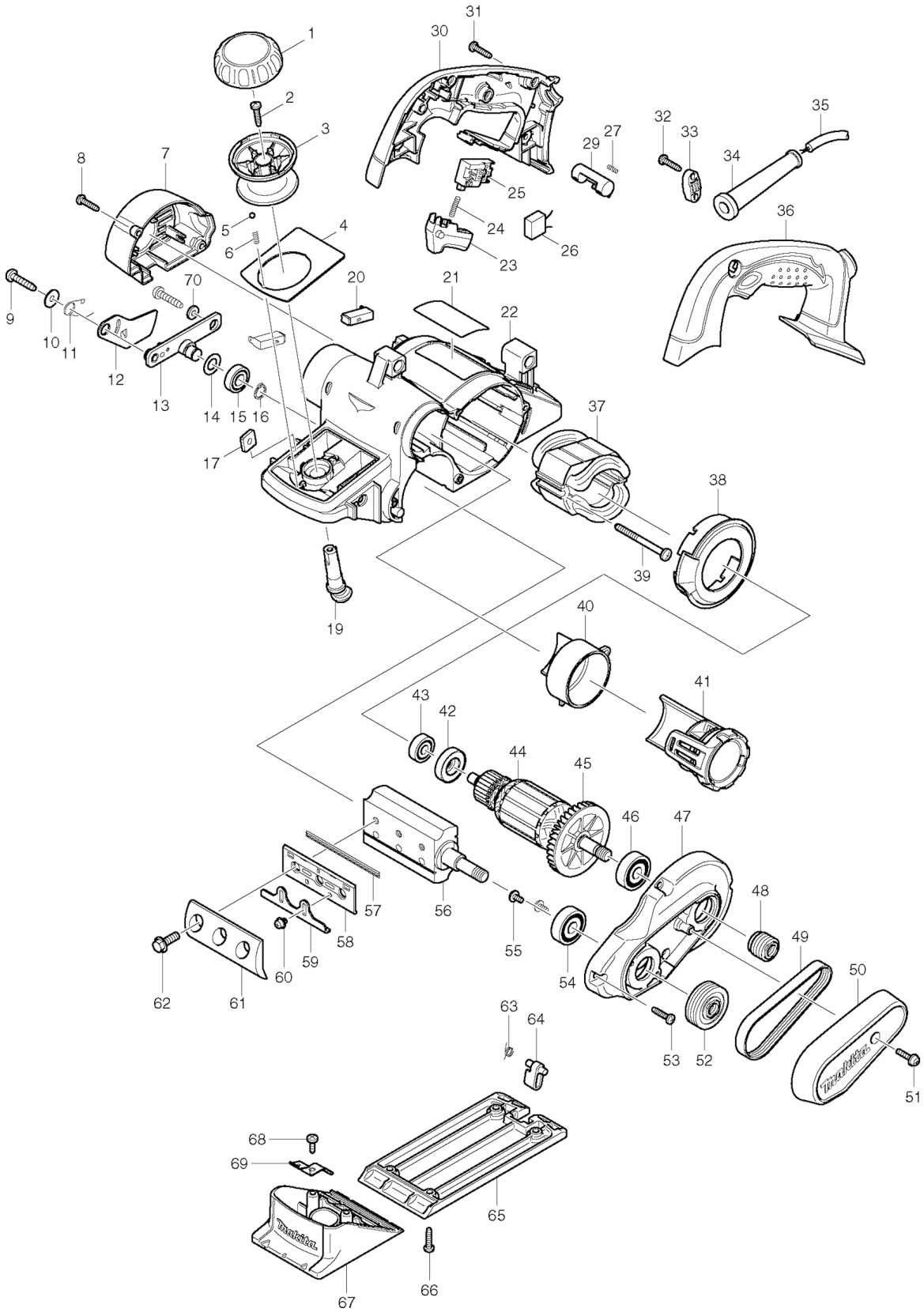

Products with multiple versions are listed in subsiding order with the newest version on top not indented

Fig #	Part ID	Part Name	Quantity
1	419700-5	KNOB COVER, KP0810	1
2	265995-6	TAPPING SCREW 4X18, BO4556K	1
3	419699-4	KNOB, KP0810	1
4	345800-4	FRONT PANEL, KP0810	1
5	216008-6	STEEL BALL 4.0, 5007NK	2
6	233325-9	COMP. SPRING 3, KP0810	2
7	158322-3	REAR COVER, KP0810	1
8	265995-6	TAPPING SCREW 4X18, BO4556K	2
9	266041-8	TAPPING SCREW, FLANGE 5X25, 5177B	2
10	253194-2	F. WASHER 5, HM1303B	1
11	233521-9	TORSION SPRING 10, KP0810	1
12	345765-0	DRUM COVER, KP0810	1
13	158184-9	DRUM HOLDER, KP0810	1
14	253758-2	F. WASHER 10, 9901	1
15	210057-5	BALL BEARING 6900LLB, BFL080F	1
16	961006-2	RETAINING RING S-10, N9501B	1
17	264002-2	SQUARE NUT M5, BJR181	2
19	419702-1	CAM, KP0810	1
20	CB132	CARBON BRUSH SET, 194984-3	1
	194984-3	CARBON BRUSH SET, 194984-3	
	191972-1	CARBON BRUSH CB-132 SET, KP0810	
21	863213-2	NAME PLATE, KP0810	1
22	419694-4	HOUSING, KP0810	1
23	419703-9	SWITCH LEVER, KP0810	1
24	233408-5	COMP. SPRING 3, KP0810	1
25	651922-3	SWITCH, HM1303B	1
27	231433-0	COMP. SPRING 4, 6233D	1
29	419705-5	LOCK ON BUTTON, KP0810	1
30	188215-0	HANDLE SET, KP0810	1
31	265995-6	TAPPING SCREW 4X18, BO4556K	5
33	687063-9	STRAIN RELIEF, 4323K	1
34	682502-4	CORD GUARD 8-85, HP2010N	1
35	664064-4	CORD (2X18X8 SJ), BO4556	1
36	188215-0	HANDLE SET, KP0810	1
37	525746-2	FIELD ASS'Y 115V, KP0810	1
38	419701-3	BAFFLE PLATE, KP0810	1
39	266095-5	TAPPING SCREW 5X55, KP0810	2
40	419710-2	NOZZLE, KP0810	1
41	125353-7	DUCT ASS'Y, KP0810	1
42	681659-8	INSULATION WASHER, KP0810	1
43	211031-6	BALL BEARING 608LLB, 9227C	1
44	513681-6	ARMATURE ASS'Y 115V, KP0810	1
45	240079-1	FAN 62, KP0810	1
46	211087-9	B. BEARING 6200DDW, 4114	1
47	158149-1	BRACKET CPL.,KP0810	1
48	222125-2	V-PULLEY 4-20L, 1900B-T2	1
49	225007-7	POLY V-BELT, KP0800K	1
50	419698-6	BELT COVER, KP0810	1
51	911133-5	P.H. SCREW M4X18, N9501B	1
52	222126-0	V-PULLEY 4-37, 1900B-T2	1
53	265995-6	TAPPING SCREW 4X18, BO4556K	4
54	211087-9	B. BEARING 6200DDW, 4114	1
55	251291-8	SCREW M4X8, BO6030	2
56	158156-4	DRUM CPL., KP0810	1
57	D-16966	DOUBLE EDGED BLADE SET, KP0800K	1
	793322-2	MINI PLANER BLADE SET,1923B	
58	343433-9	SET PLATE (MINI BLADE), LXPK01	2
59	345644-2	ADJUST PLATE, KP0810	2

60	251246-3	P.H. SCREW M4X5, 1902	4
61	345001-4	DRUM PLATE SET, 1100	1
62	251609-3	H.F.H. BOLT M6X17, LXPK01	6
63	231698-4	TORSION SPRING 7, KP0810	1
64	419706-3	FOOT, KP0810	1
65	318098-6	BASE, KP0810	1
66	265995-6	TAPPING SCREW 4X18, BO4556K	4
67	158360-5	FRONT BASE, KP0810	1
68	266026-4	TAPPING SCREW 4X12, LS1016L	2
69	232232-3	LEAF SPRING, KP0810	2
70	267012-8	FLAT WASHER 5, 1912B	1
	122785-9	GUIDE RULE ASS'Y, KP0810	1
	123062-2	BLADE GAUGE, KP0800K	1
	782209-3	SOCKET WRENCH, KP0800K	1
	251878-6	SCREW M5X20, UM140D	1
	253807-5	F. WASHER 5, 6012HDW	1
	342390-8	DEPTH GUIDE, 1923B	1