Parts Breakdown

HR4010C

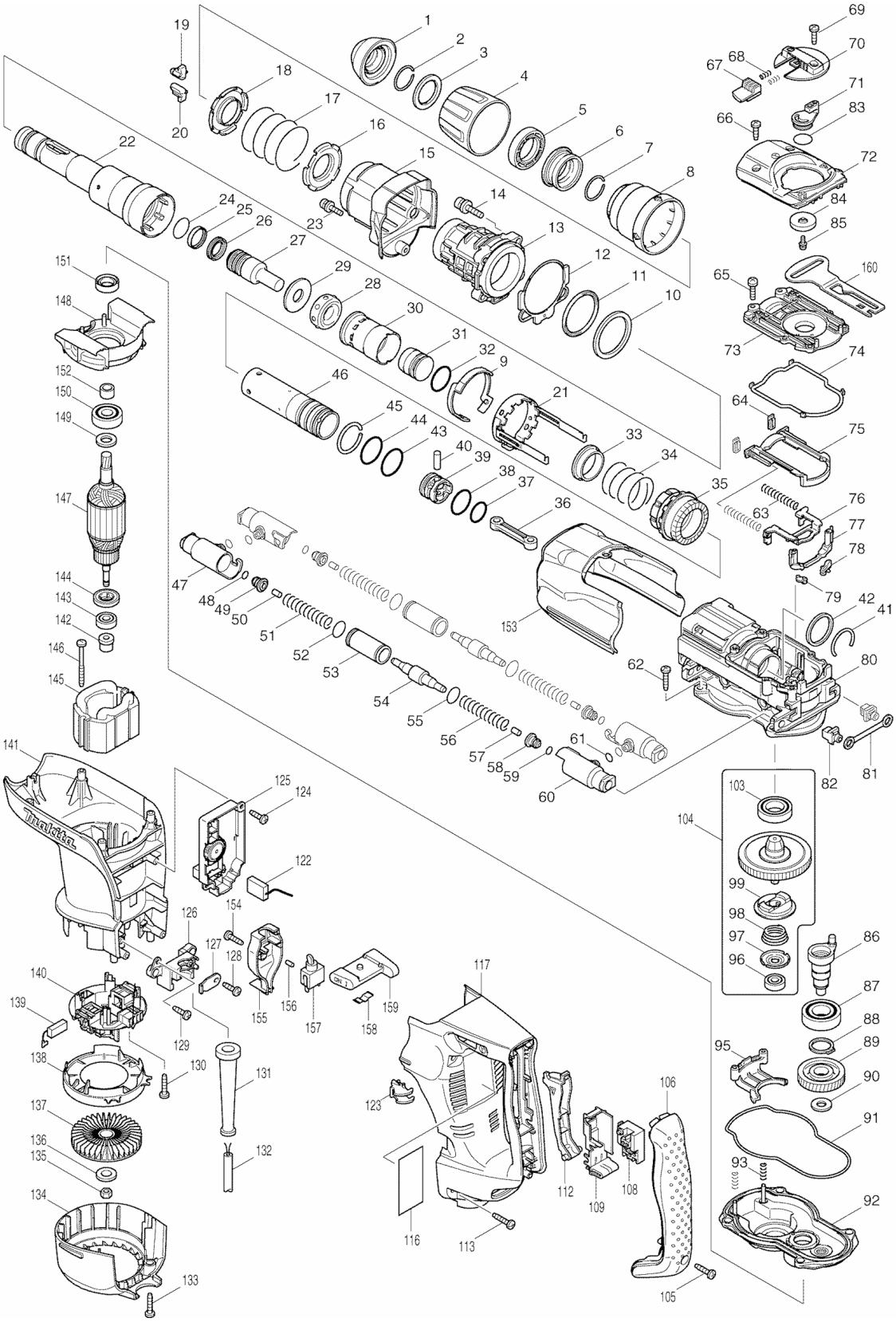

Products with multiple versions are listed in subsiding order with the newest version on top not indented

Fig #	Part ID	Part Name	Quantity
1	286285-4	TOOL HOLDER CAP, HR4001C	1
	286272-3	TOOL HOLDER CAP, HR4002	
2	231984-3	RING SPRING 25, HR5001C	1
3	267272-2	FLAT WASHER 28, HM0860C	1
4	419015-0	CHUCK COVER, HR4001C	1
5	419002-9	SPACER, HR4001C	1
6	324548-1	CHUCK RING, HR4001C	1
7	231984-3	RING SPRING 25, HR5001C	1
8	419016-8	RELEASE COVER, HR4001C	1
9	419760-7	LOCK SLEEVE GUIDE, HR4002	1
	419017-6	LOCK SLEEVE GUIDE, HR4001C	
10	267336-2	FLAT WASHER 45, HR4001C	1
	267298-4	FLAT WASHER 45, HR4001C	
11	262116-1	URETHAN RING 45, HR4001C	1
12	421911-0	SEAL SHEET, HR4010C	1
13	154621-1	BARREL CPL., HR4001C	1
14	922353-6	H. S. H. BOLT M6X30,HR5001C	4
15	154624-5	BARREL COVER CPL.,HR4001C	1
16	345579-7	SPRING GUIDE, HR4001C	1
17	233431-0	COMP. SPRING 48, HR4001C	1
18	345579-7	SPRING GUIDE, HR4001C	1
19	310161-1	TOOL RETAINER, HR4001C	1
21	165633-9	LOCK SLEEVE, HR4002	1
	165446-8	LOCK SLEEVE, HR4002	
	165407-8	N/A	
22	324542-3	TOOL HOLDER, HR4002	1
23	266437-3	H.S.H. BOLT M4X16, HR4001C	1
	922128-3	H.S. HEAD BOLT M4X16, HR2811F	
24	213317-4	O RING 20, HR4000C	1
25	213392-0	FLUORIDE RING 25, HR4000C	1
26	213281-9	X-RING 18, HR4001C	1
27	324569-3	IMPACT BOLT, HR4001C	1
28	421901-3	RUBBER RING 17, HR4010C	1
29	324573-2	RING 17, HR4001C	1
30	419003-7	SLIDE SLEEVE, HR4001C	1
31	324571-6	STRIKER, HR4010C	1
32	213962-5	O RING 22, HR4002	1
33	331709-6	RING 33, HR4001C	1
34	233448-3	COMP. SPRING 37, HR4002	1
35	227509-9	STRAIGHT BEVEL GEAR, HR4001C	1
	227486-5	S. BEVEL GEAR 25,HR4001C	
36	419005-3	CONNECTING ROD, HR4001C	1
37	213379-2	O RING 21, HR4041C	1
38	213962-5	O RING 22, HR4002	1
39	419004-5	PISTON, HR4041C	1
40	256197-5	PIN 7, JR3020	1
41	233937-8	RING SPRING 31, HR4001C	1
42	257268-1	RING 33, HR4001C	1
43	213406-5	O RING 30, HR5000	1
45	233935-2	RING SPRING 32, HR4001C	1
46	324570-8	CYLINDER 28.5, HR4001C	1
47	317923-8	PIPE HOLDER, HR4010C	2
48	213030-4	O RING 8, AN451	2
49	419011-8	SPRING GUIDE, HR4010C	2
50	263005-3	RUBBER PIN 6, LS1016L	2
51	233435-2	COMP. SPRING 11, HR4010C	2
52	213275-4	O RING 18, BFL400FZ	2
53	324572-4	PIPE 16, HR4010C	2

54	324574-0	COUNTER WEIGHT, HR4010C	2
55	213275-4	O RING 18, BFL400FZ	2
56	233435-2	COMP. SPRING 11, HR4010C	2
57	263005-3	RUBBER PIN 6, LS1016L	2
58	419011-8	SPRING GUIDE, HR4010C	2
59	213030-4	O RING 8, AN451	2
60	317923-8	PIPE HOLDER, HR4010C	2
61	213030-4	O RING 8, AN451	4
62	266041-8	TAPPING SCREW, FLANGE 5X25, 5177B	4
63	233432-8	COMP. SPRING 7, HR4001C	2
64	421910-2	SEAL PLATE, HR4010C	2
65	911133-5	P.H. SCREW M4X18, N9501B	6
66	266192-7	TAPPING SCREW 4X14, 2012NB	2
67	419009-5	LOCK BUTTON, HR4001C	1
68	233436-0	COMP. SPRING 3, HR4001C	2
69	266192-7	TAPPING SCREW 4X14, 2012NB	1
70	419020-7	CHANGE LEVER, HR4001C	1
71	419007-9	CRANK LEVER, HR4001C	1
72	317925-4	CRANK CAP COVER, HR4001C	1
73	419030-4	CRANK CAP, HR4001C	1
74	421908-9	SEAL RING, HR4001C	1
75	419019-2	LINK PLATE GUIDE, HR4001C	1
76	345582-8	LINK PLATE, HR4001C	1
77	419012-6	AIR PIPE, HR4010C	1
78	421909-7	AIR PIPE SEAL, HR4010C	1
80	154622-9	CRANK HOUSING CPL.,HR4010C	1
81	423345-3	CUSHION PLATE, HR4001C	1
82	419008-7	FIX GUIDE, HR4001C	2
83	213262-3	O RING 18, 5005BA	1
84	419006-1	LINK LEVER, HR4001C	1
85	911511-9	P.H. SCREW M4X10, HR4010C	1
86	324550-4	CRANK SHAFT, HR4001C	1
87	211332-2	BALL BEARING 6004LLU, HR4002	1
88	961060-6	RETAINING RING S-20, 2708	1
89	226605-0	HELICAL GEAR 38, HR4001C	1
90	253180-3	F. WASHER 10, 6906	1
91	421907-1	SEAL RING, HR4010C	1
92	154623-7	GEAR HOUSING CPL., HR4001C	1
93	233433-6	COMP. SPRING 5, HR4001C	2
95	419018-4	CHANGE PLATE, HR4001C	1
96	210005-4	BALL BEARING 608DDW, LS1016L	1
97	345581-0	CUP WASHER 8, HR4001C	1
98	233936-0	CONICAL COMP. SPR. 19-27,HR4001C	1
99	324549-9	DRIVING FLANGE, HR4001C	1
103	211323-3	BALL BEARING 6904LLU, HR2420	1
104	135508-6	TORQUE LIMITER ASS'Y, HR4010C	1
	135086-6	TORQUE LIMITER ASS'Y, HR4001C	
105	265995-6	TAPPING SCREW 4X18, BO4556K	1
106	419036-2	HANDLE COVER, HR4001C	1
108	650676-9	SWITCH, HR4010C	1
	650567-4	SWITCH, HR4010C	
109	154626-1	SWITCH HOLDER CPL.,HR4001	1
112	419028-1	SWITCH LEVER, HR4001C	1
113	266041-8	TAPPING SCREW, FLANGE 5X25, 5177B	4
116	861492-6	NAME PLATE, HR4010C	1
117	419040-1	HANDLE, HR4010C	1
122	638407-6	LEAD UNIT, HR4001C	1
123	419010-0	LENS, HR4001C	1
124	266192-7	TAPPING SCREW 4X14, 2012NB	1
125	631656-4	CONTROLLER, HR4001C	1
126	419024-9	CORD LAMP BASE, HR4001C	1

127	687169-3	STRAIN RELIEF, HP1621F	1
128	266192-7	TAPPING SCREW 4X14, 2012NB	1
130	265995-6	TAPPING SCREW 4X18, BO4556K	4
131	682560-0	CORD GUARD 10, HM1202C	1
132	664276-9	CORD (2X16X16 SJ), HR5000	1
133	265995-6	TAPPING SCREW 4X18, BO4556K	2
134	419032-0	REAR COVER, HR4010C	1
135	931303-0	HEX NUT M6, 2012	1
136	253047-5	F. WASHER 6, LXSM01	1
137	241876-8	FAN 76, HM1100C	1
138	419022-3	FAN GUIDE, HR4001C	1
139	CB350	CARBON BRUSH SET, 195004-6	1
	195004-6	CARBON BRUSH SET, 195004-6	
	194160-9	CARBON BRUSH CB-350,HR4001C	
140	638715-5	BRUSH HOLDER UNIT, HR4010C	1
	638393-1	BRUSH HOLDER UNIT, HR4002	
141	154619-8	MOTOR HOUSING CPL., HR4001C	1
142	324390-0	SHOULDER SLEEVE 6, HR4001C	1
143	210005-4	BALL BEARING 608DDW, LS1016L	1
144	681650-6	INSULATION WASHER, HR4000C	1
145	625756-0	FIELD 115V, HR4041C	1
	625736-6	FIELD 115V, HR4010C	
146	266095-5	TAPPING SCREW 5X55, KP0810	2
147	513631-1	ARMATURE ASS'Y 115V, HR4001C	1
148	419021-5	BAFFLE PLATE, HR4001C	1
149	253084-9	F. WASHER 12, 5014NB	1
150	211137-0	BALL BEARING 6201LLU,4140	1
151	213231-4	OIL SEAL 15, HR4500C	1
152	331596-3	SLEEVE 12, HR4041C	1
153	419033-8	CRANK HSG. COVER, HR4010C	1
154	266192-7	TAPPING SCREW 4X14, 2012NB	1
155	419026-5	SWITCH BOX, HR4001C	1
156	263027-3	RUBBER PIN 4, HM0860C	1
157	651418-4	SWITCH, 9564CV	1
158	232209-8	LEAF SPRING, HM0860C	1
159	154635-0	SLIDE LEVER CPL.,HR4001C	1
160	419027-3	CONTROL PLATE, HR4001C	1
	421939-8	SPONGE SHEET, HR4001C	1
	819361-5	N/A	1
	134890-0	SIDE HANDLE 68 ASS'Y,HR4000C	1
	135209-6	GRIP ASS'Y, HR4010C	1
	134803-1	GRIP 36 ASS'Y, HR4040C	
	154677-4	PLASTIC CASE, HR4010C	1
	194683-7	HAMMER BIT GREASE 100ML, HM & HR SERIES	1
	181573-3	BIT GREASE, HR2400	
	443122-7	CLOTH F/WIPING OIL, HR4001C	1
	892672-3	CAUTION LABEL, TW0200	1
	810134-9	CAUTION LABEL, 3709	