Parts Breakdown

FS4200TP

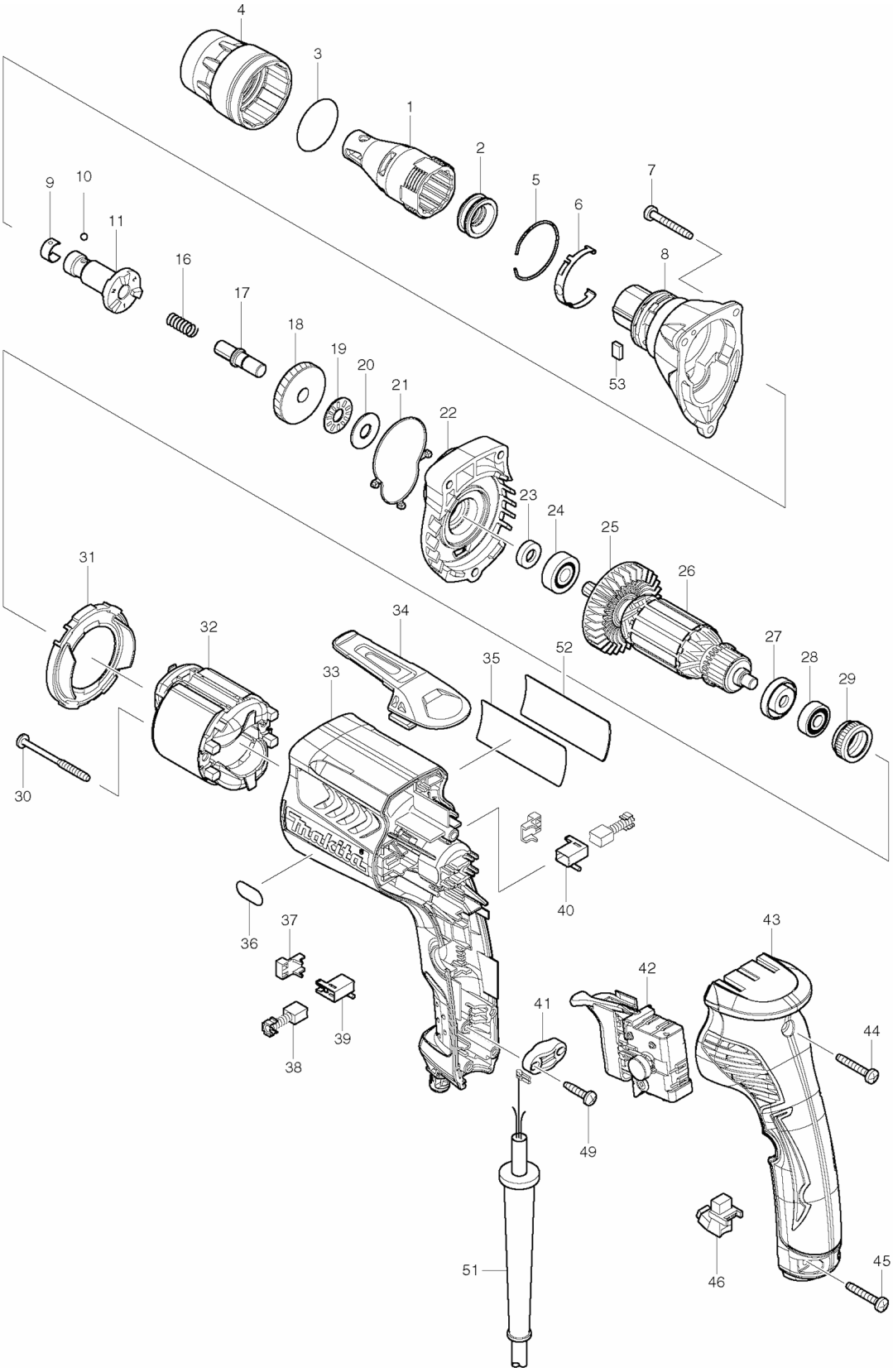

Parts Breakdown

FS4200TP

Products with multiple versions are listed in subsiding order with the newest version on top not indented

Fig #	Part ID	Part Name	Quantity
1	158876-0	LOCATOR, FS4200	1
2	424163-2	DUST SEAL SLEEVE, FS4200	1
3	424235-3	SEAL RING 30, FS4200	1
4	450881-6	LOCK RING, FS4200	1
5	234266-2	RING SPRING, FS4200	1
	233974-2	RING SPRING 33, FS4200	
6	232245-4	LEAF SPRING, FS4200	1
7	266361-0	TAPPING SCREW 4X30, LXDG01	3
8	158880-9	GEAR HOUSING CPL., FS4200	1
9	232050-9	LEAF SPRING, FS4200	1
10	216001-0	STEEL BALL 3.5, LXDT08	1
11	324983-3	SPINDLE 125N, FS4200	1
16	233126-5	COMP. SPRING 6, FS4200	1
17	268229-6	COLLARED PIN 8, FS4200	1
18	227769-3	HELICAL GEAR, FS4200	1
	226687-2	HELICAL GEAR 41N, FS4200	
19	216415-3	THRUST NEEDLE GAUGE 821, FS4200	1
20	216212-7	WASHER 821, FS4200	1
21	424162-4	SEAL RING, FS4200	1
22	158874-4	GEAR HOUSING COVER CPL., FS4200	1
23	451099-2	RING 7, FS4200	1
24	210007-0	BALL BEARING 608VV, 6825	1
25	240083-0	FAN 52, HR1830F	1
26	515756-7	ARMATURE ASS'Y, FS4200	1
27	681636-0	INSULATION WASHER, GA4030	1
28	210062-2	BALL BEARING 607ZZ, 9550H	1
29	421868-5	LABYRINTH RUBBER RING, GA4030	1
30	266467-4	TAPPING SCREW 4X50, FS4200	2
31	450880-8	BAFFLE PLATE, FS4200	1
32	633691-8	FIELD, FS4200	1
33	140256-4	MOTOR HOUSING S CPL., FS4200TP	1
34	162272-6	HOOK, FS4200	1
35	867325-3	NAME PLATE, FS4200TP	1
36	808575-1	INDICATION LABEL, FS4200	1
37	689111-0	SPACER, HP2050F	2
38	CB407	CARBON BRUSH SET, 195007-0	1
	195007-0	CARBON BRUSH SET, 195007-0	
39	643948-9	BRUSH HOLDER, 6823	1
40	643951-0	BRUSH HOLDER, FS4200	1
41	687123-7	STRAIN RELIEF, JV0600K	1
42	650614-1	SWITCH, FS4200	1
43	158877-8	HANDLE COVER S CPL., FS4200	1
44	266374-1	TAPPING SCREW 4X25, GA7021	1
46	631938-4	LIGHT CIRCUIT, FS6200	1
49	265995-6	TAPPING SCREW 4X18, BO4556K	2
51	699037-8	POWER SUPPLY CORD UNIT, FS4200TP	1
52	892811-5	CLEAR LABEL, FS2200	1
	819349-5	CLEAR LABEL, FS4200	
53	423413-2	RUBBER PLATE, FS4200	1
	784261-7	+ BIT 2-25, FS4200	2
	784801-1	MAGNETIC BIT HOLDER, FS4200	1