Parts Breakdown

BVR850

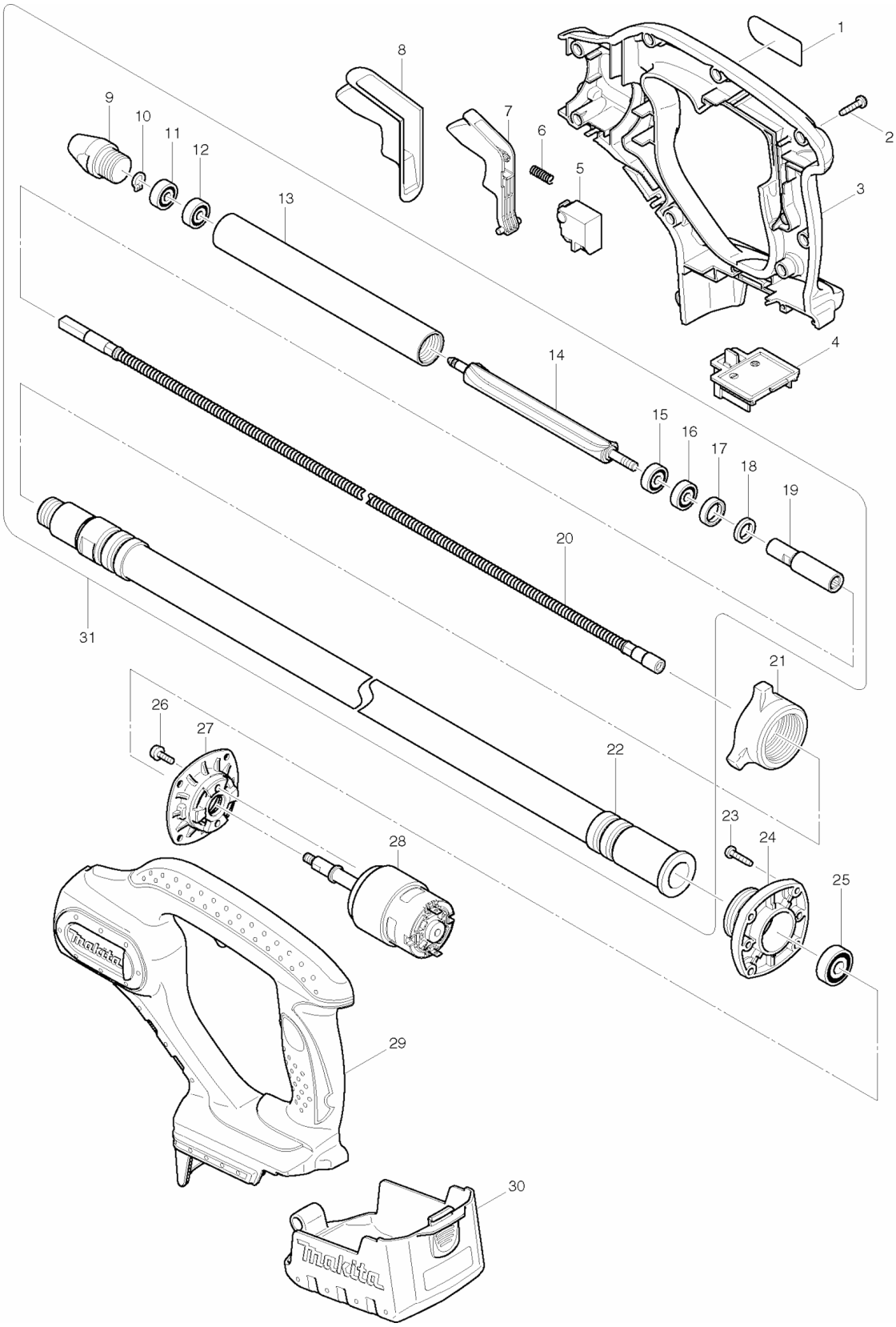

Parts Breakdown

BVR850

Products with multiple versions are listed in subsiding order with the newest version on top not indented

Fig #	Part ID	Part Name	Quantity
1	862957-1	NAME PLATE, BVR850	1
	862362-2	NAME PLATE, BVR850	
2	266045-0	TAPPING SCREW 4X20, 9046	9
3	188170-6	HOUSING SET, BVR450	1
4	643838-6	TERMINAL, BDF451	1
	643812-4	TERMINAL, BDA350	
5	650580-2	SWITCH, BVR450	1
6	231298-0	COMP. SPRING 6, HM1500	1
7	419511-8	SWITCH LEVER, BVR450	1
8	421961-5	WATERPROOF COVER, BVR450	1
9	322935-8	CAP, VR250DW	1
10	961002-0	RETAINING RING S-6, 9566CV	1
11	210018-5	BALL BEARING 626, VR250DW	1
13	331503-6	PIPE 25, VR250DW	1
14	322934-0	UNBALANCER, BVR850	1
15	211016-2	B. BEARING 626LLB, DS4011	1
17	421578-4	RUBBER RING, BVR850	1
18	443101-5	FELT RING, VR250DW	1
19	326203-1	JOINT, BVR450	1
	324691-6	JOINT, BVR850	
20	163535-3	FLEXIBLE WIRE, BVR850	1
	163466-6	FLEXIBLE WIRE, BVR850	
21	416244-6	NUT 36, VR250DW	1
22	163538-7	FLEXIBLE HOSE, BVR850	1
	163465-8	FLEXIBLE HOSE, BVR850	
23	266045-0	TAPPING SCREW 4X20, 9046	4
24	316893-8	HOUSING W/O BEARING, VR250DW	1
25	211056-0	B. BEARING 629LLB, 4101RH	1
	210042-8	BALL BEARING 629LLB, LXDG01	
26	911118-1	P.H. SCREW M4X12, 6221D	2
27	318038-4	SUPPORTER, BVR450	1
28	629836-4	DC MOTOR, BVR450	1
29	188170-6	HOUSING SET, BVR450	1
30	154948-9	COVER CPL.,BVR450	1
	126208-9	N/A	1
	125343-0	N/A	
	***DC18SC	LXT 7.2-18V CHARGER, BHP451	1
	BL1830	18V LXT LITHIUM-ION BATTERY	2
	195324-8	BATTERY BL1830	
	194205-3	BL1830 BATTERY, BULK	
	824768-2	PLASTIC CASE FOR BATTERY & CHARGER, BVR4	1
	450128-8	BATTERY COVER FOR 18V/14.4V LI-ION BATTERY	1