Parts Breakdown

BST221

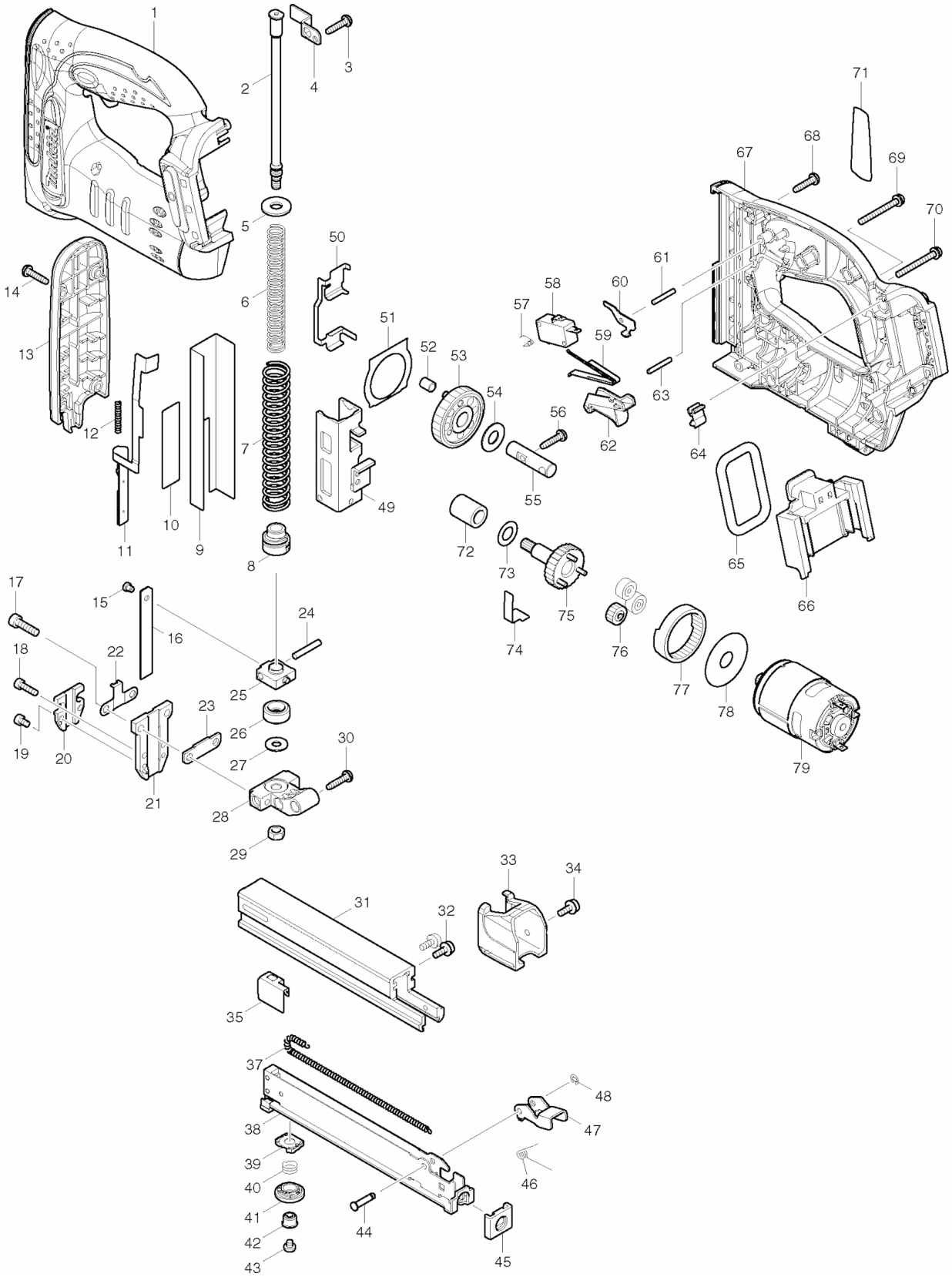

Products with multiple versions are listed in subsiding order with the newest version on top not indented

Fig #	Part ID	Part Name	Quantity
1	188588-1	HOUSING SET, BST221	1
2	325635-9	GUIDE BOLT, BST221	1
3	265995-6	TAPPING SCREW 4X18, BO4556K	1
4	345907-6	FIX PLATE, BST221	1
5	253762-1	F. WASHER 8, LS1016L	1
6	234060-2	COMPRESSION SPRING 9, BST221	1
7	234101-4	COMPRESSION SPRING 13, BST221	1
8	424135-7	SPRING HOLDER, BST221	1
9	345978-3	GUIDE PLATE, BST221	1
10	345906-8	UPPER PLATE, BST221	1
11	165602-0	SAFETY LEVER, BST221	1
	165503-2	SAFETY LEVER, BST221	
12	234078-3	COMPRESSION SPRING 4, BST221	1
13	158897-2	N/A	1
14	265995-6	TAPPING SCREW 4X18, BO4556K	4
15	268157-5	PIN 4, BST221	1
16	345996-1	DRIVER, BST221	1
17	922227-1	H.S.H. BOLT M5X18, 2030N	2
18	266201-2	HEX SOCKET HEAD BOLT M4X14, BST221	2
19	266199-3	HEX SOCKET HEAD BOLT M4X6, BST221	2
20	451801-3	SAFETY LEVER GUIDE, BST221	1
	450541-0	SAFETY LEVER GUIDE, BST221	
21	158759-4	DRIVER GUIDE CPL., BST221	1
22	345910-7	SPRING BASE, BST221	1
23	344670-8	SET PLATE, BST221	1
24	256206-0	PIN 4, T220DW	1
25	313150-5	DRIVER LOCK, BST221	1
26	424099-5	CUSHION, BST221	1
27	253804-1	F. WASHER 6, LS1016L	1
28	318267-9	HOLDER, BST221	1
29	931302-2	HEX NUT M6, HR2400	1
30	265995-6	TAPPING SCREW 4X18, BO4556K	1
31	158758-6	MAIN MAGAZINE CPL., BST221	1
32	911113-1	P.H. SCREW M4X10, LS1016L	2
33	450540-2	END CAP, BST221	1
34	911113-1	P.H. SCREW M4X10, LS1016L	1
35	345997-9	PUSHER, BST221	1
37	231854-6	TENSION SPRING 3, BST221	1
38	165532-5	SUB MAGAZINE, BST221	1
39	450775-5	ADJUSTER BASE, BST221	1
40	231323-7	COMP. SPRING 9, BST211	1
41	450702-2	ADJUSTER, BST221	1
42	450774-7	LOCK SLEEVE, BST221	1
43	265127-5	P.H. SCREW M4X4, BFT040FZ	1
44	268029-4	PIN 4, BST221	1
45	421637-4	MAGAZINE END, BST221	1
46	233528-5	TORSION SPRING 5, BST221	1
47	345861-4	LEVER, BST221	1
48	961017-7	STOP RING E-3, HR2475	1
49	165506-6	HAMMER, BST221	1
50	345914-9	SLIDE PLATE, BST221	1
51	343629-2	PLATE, T220DW	1
52	257772-0	SLEEVE 5, BST221	1
53	158646-7	SPUR GEAR 55 CPL., BST221	1
54	253171-4	F. WASHER 10, T220DW	1
55	324947-7	PIN 10, BST221	1
56	265995-6	TAPPING SCREW 4X18, BO4556K	1
57	233531-6	TORSION SPRING 3, BST221	1

58	651891-8	SWITCH, 6900DW, SH01W	1
59	232240-4	LEAF SPRING, BST221	1
60	345908-4	RELEASE PLATE, BST221	1
61	256221-4	PIN 3, JR3020	1
62	450536-3	TRIGGER, BST221	1
63	256221-4	PIN 3, JR3020	1
64	424026-2	CUSHION, LXPH03	1
65	424030-1	CUSHION, BHR240	1
66	643841-7	TERMINAL, BST221	1
	643822-1	TERMINAL, BHR240	
67	188588-1	HOUSING SET, BST221	1
68	265995-6	TAPPING SCREW 4X18, BO4556K	6
69	911163-6	P.H. SCREW M4X35, 4014NV	1
71	865830-4	NAME PLATE, BST221	1
72	214058-5	PLANE BEARING 10, T220DW	1
73	253758-2	F. WASHER 10, 9901	1
74	232241-2	LEAF SPRING, BST221	1
75	158647-5	SPUR GEAR 7 CPL., BST221	1
76	221961-3	SPUR GEAR 27, T220DW	3
77	221999-8	INTERNAL GEAR 69, T220DW	1
78	267053-4	F. WASHER 12, T220DW	1
79	629858-4	DC MOTOR, BST221	1
	195246-2	N/A	
	1922-A	PROTECTIVE EYE WEAR, AN611	
	192517-8	SAFETY GOGGLE, AN611	
	251314-2	SCREW M4X12, LXPH03	1
	346449-3	BELT HOOK SILM & SHORT FOR CORDLESS TOO	1
	346317-0	HOOK, LXFD01	
	324705-1	HOOK, BHP451,BTW251	