Parts Breakdown

BJR181

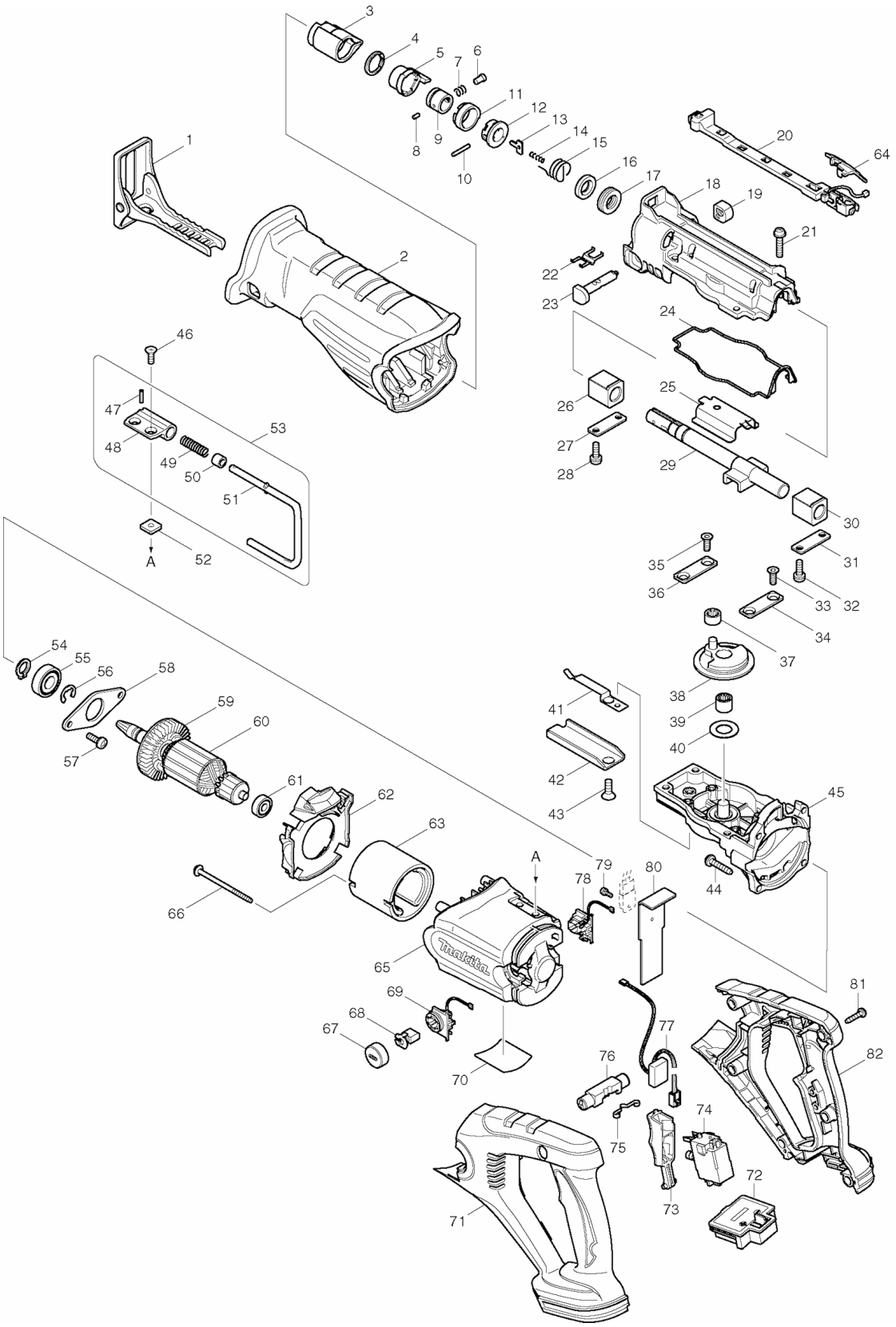

Products with multiple versions are listed in subsiding order with the newest version on top not indented

Fig #	Part ID	Part Name	Quantity
1	163453-5	SHOE, JR3070CT	1
2	421945-3	INSULATION COVER, BJR181	1
3	424147-0	PROTECTOR, JR3050T	1
	421894-4	PROTECTOR, JR3050T	
4	257952-8	RETAINING RING (EXT) 18, JR3060T	1
	961078-7	RETAINING RING S-18,BHR200SH	
5	310285-3	DRIVING SLEEVE, JR3050T	1
	310160-3	DRIVING SLEEVE, JR3050T	
6	256492-3	SHOULDER PIN 5, JR3050T	1
7	233345-3	COMPRESSION SPRING 6, JR3050T	1
8	268094-3	PIN 3, JR3050T	1
9	331720-8	GUIDE SLEEVE, JR3060T	1
	331639-1	GUIDE SLEEVE, JR180D	
10	256158-5	PIN 3, LS1016L	1
11	417791-0	DRIVING SLEEVE GUIDE, JR3050T	1
12	418311-3	SLEEVE, JR3050T	1
13	345214-7	PUSH PLATE, BJR240SH	1
14	233025-1	COMPRESSION SPRING 2, JR3050T	1
15	231687-9	TORSION SPRING 17, JR3050T	1
16	213151-2	OIL SEAL 14, 6903VD	1
17	213174-0	X RING 14, JR3030	1
18	154813-2	GEAR HOUSING COVER CPL.,BJR181	1
19	418806-6	CAP, JR3050T	1
20	631689-9	LED CIRCUIT, BJR181	1
21	911243-8	P.H. SCREW M5X25, GA7911	4
22	232221-8	LEAF SPRING (A), JR3050T	1
23	162236-0	SHIFT BUTTON, JR3050T	1
24	421946-1	SEAL RING, BJR181	1
25	345480-6	SLIDE PLATE, JR3050T	1
26	214170-1	PLANE BEARING, JR3060T	1
27	341462-6	PLATE, JR3000V	1
28	911225-0	PAN HEAD SCREW M5X16, JR3050T	2
29	168405-1	SLIDER, JR3050T	1
	154788-5	SLIDER CPL., JR3050T	
30	214170-1	PLANE BEARING, JR3060T	1
31	341462-6	PLATE, JR3000V	1
32	911225-0	PAN HEAD SCREW M5X16, JR3050T	2
33	265148-7	TORX S.HEAD SCREW M5X14, JR3050T	2
34	344795-8	PLATE C, JR180DWB	1
35	265148-7	TORX S.HEAD SCREW M5X14, JR3050T	2
36	344795-8	PLATE C, JR180DWB	1
37	212959-1	NEEDLE BEARING 708, JR3050T	1
	212001-8	N. BEARING 708, JR3000V	
38	125423-2	GEAR ASS'Y, BJR182Z	1
	125320-2	GEAR ASS'Y, BJR181	
39	212080-6	NEEDLE BEARING 1012, BJR182Z	1
	212074-1	NEEDLE BEARING 1012,9069	
40	253797-2	F. WASHER 14,JR3030T	1
41	232222-6	LEAF SPRING (B), JR3050T	1
42	345479-1	SHOE GUIDE, JR3050T	1
43	265165-7	TORX C.S.H.SCREW M6X16,JR3050T	1
44	266041-8	TAPPING SCREW, FLANGE 5X25, 5177B	4
45	154812-4	GEAR HOUSING CPL.,BJR181	1
46	912207-5	C.S.H. SCREW M5X10, 5007NB	2
47	951057-3	SPRING PIN 3-12, BJR181	1
48	313127-0	JOINT, BJR181	1
49	233455-6	COMPRESSION SPRING 7, BJR181	1
50	262561-0	SLEEVE 6, BJR181	1

51	281218-4	HOOK, BJR181	1
52	264002-2	SQUARE NUT M5, BJR181	2
53	125321-0	HOOK ASS'Y, BJR181	1
54	961052-5	RETAINING RING S-12, LS1016L	1
55	210102-6	BALL BEARING 6001DDW, JR3050T	1
56	961016-9	STOP RING E-10, BJR182	1
57	911225-0	PAN HEAD SCREW M5X16, JR3050T	2
58	285726-7	BEARING RETAINER 63, BJR182Z	1
59	241869-5	FAN 55, 5621DWA	1
60	519176-7	ARMATURE ASS'Y 18V, BJR181	1
61	210062-2	BALL BEARING 607ZZ, 9550H	1
62	419333-6	BAFFLE PLATE, BJR181	1
63	638107-8	YOKE UNIT, BSS610	1
64	419327-1	COVER, BJR181	1
65	419330-2	MOTOR HOUSING, BJR181	1
66	266292-3	TAPPING SCREW 4X65, 5402NA	2
67	643941-3	HOLDER CAP, BJR181	2
68	CB441	CARBON BRUSH SET, 195022-4	1
	195022-4	CARBON BRUSH SET, 195022-4	
	194435-6	CARBON BRUSH SET CB-441, BJR181	
	191976-3	CARBON BRUSH CB-432, BTD200SH	
69	643949-7	BRUSH HOLDER R, BJR181	1
70	862359-1	NAME PLATE, BJR181	1
	861930-8	NAME PLATE, BJR181	
71	187485-8	HANDLE SET, BJR181	1
	188046-7	HANDLE SET, BJR181	
72	643859-8	TERMINAL, LXPH03	1
	643838-6	TERMINAL, BDF451	
	643812-4	TERMINAL, BDA350	
73	419336-0	SWITCH LEVER, BJR181	1
74	650647-6	SWITCH, BJR181	1
	650574-7	SWITCH, BJR181	
75	232152-1	LEAF SPRING, 6832	1
76	419334-4	LOCK OFF BUTTON, BJR181	1
77	631690-4	POWER SUPPLY CIRCUIT,BJR181	1
78	643815-8	BRUSH HOLDER, BJR181	1
79	911006-2	P.H. SCREW M3X8, LXSF01	1
80	689116-0	HEAT SINK, BJR240SH	1
81	266045-0	TAPPING SCREW 4X20, 9046	6
82	187485-8	HANDLE SET, BJR181	1
	188046-7	HANDLE SET, BJR181	
	***DC18SC	LXT 7.2-18V CHARGER, BHP451	1
	195324-8	BATTERY BL1830	
	BL1830	18V LXT LITHIUM-ION BATTERY	
	195324-8	BATTERY BL1830	
	194205-3	BL1830 BATTERY, BULK	
	194068-7	RECIPRO SAW BLADE SET, BJR182Z	1
	824760-8	PLASTIC CARRYING CASE, BJR181	1
	450128-8	BATTERY COVER FOR 18V/14.4V LI-ION BATTERY	1
	810201-0	CAUTION LABEL, BVR450	1