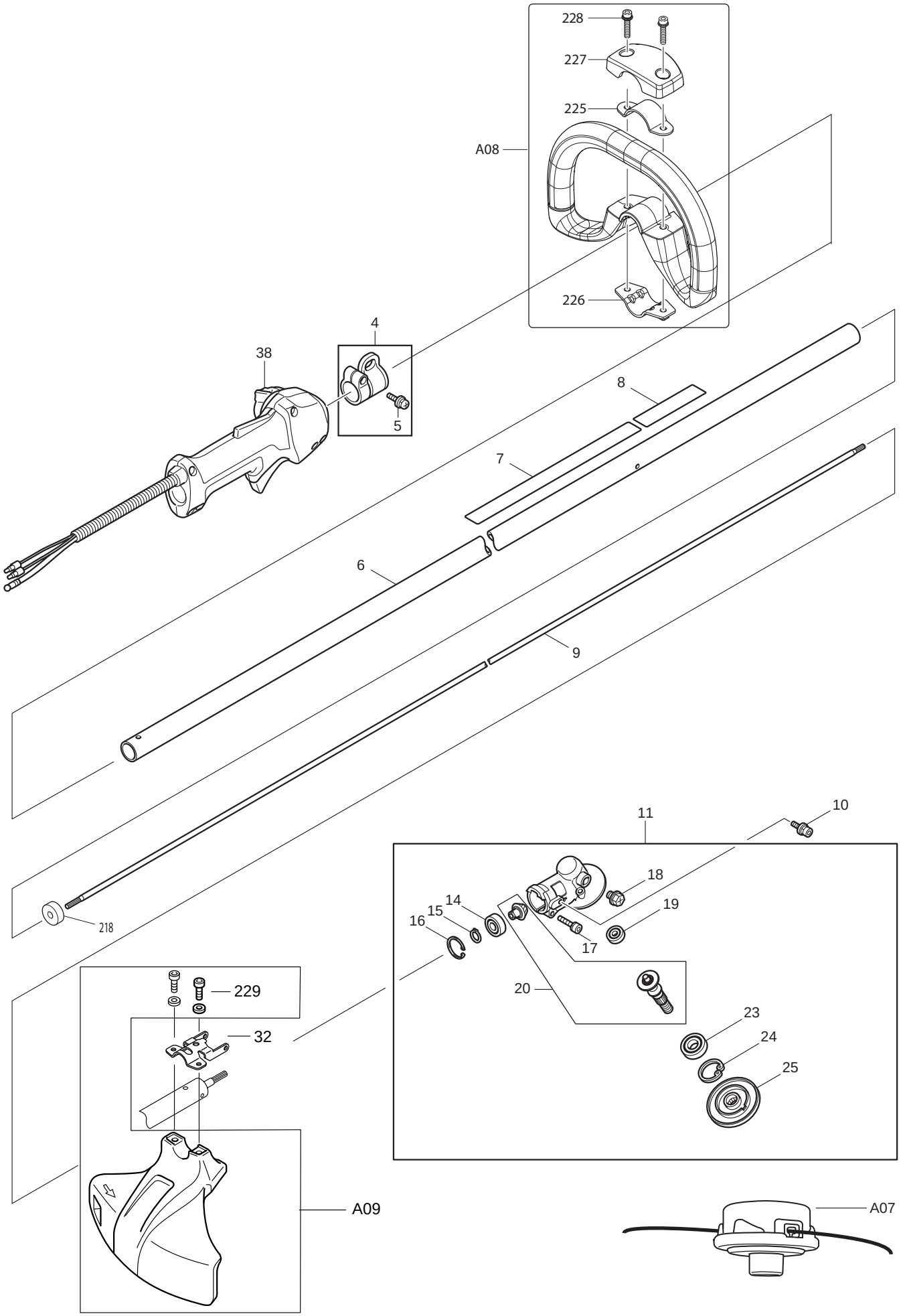
228
227
225
A08
226
4
38
5
8
7
6
9
218
11
10
18
14
15
16
19
17
20
23
24
25
229
32
A09
A07

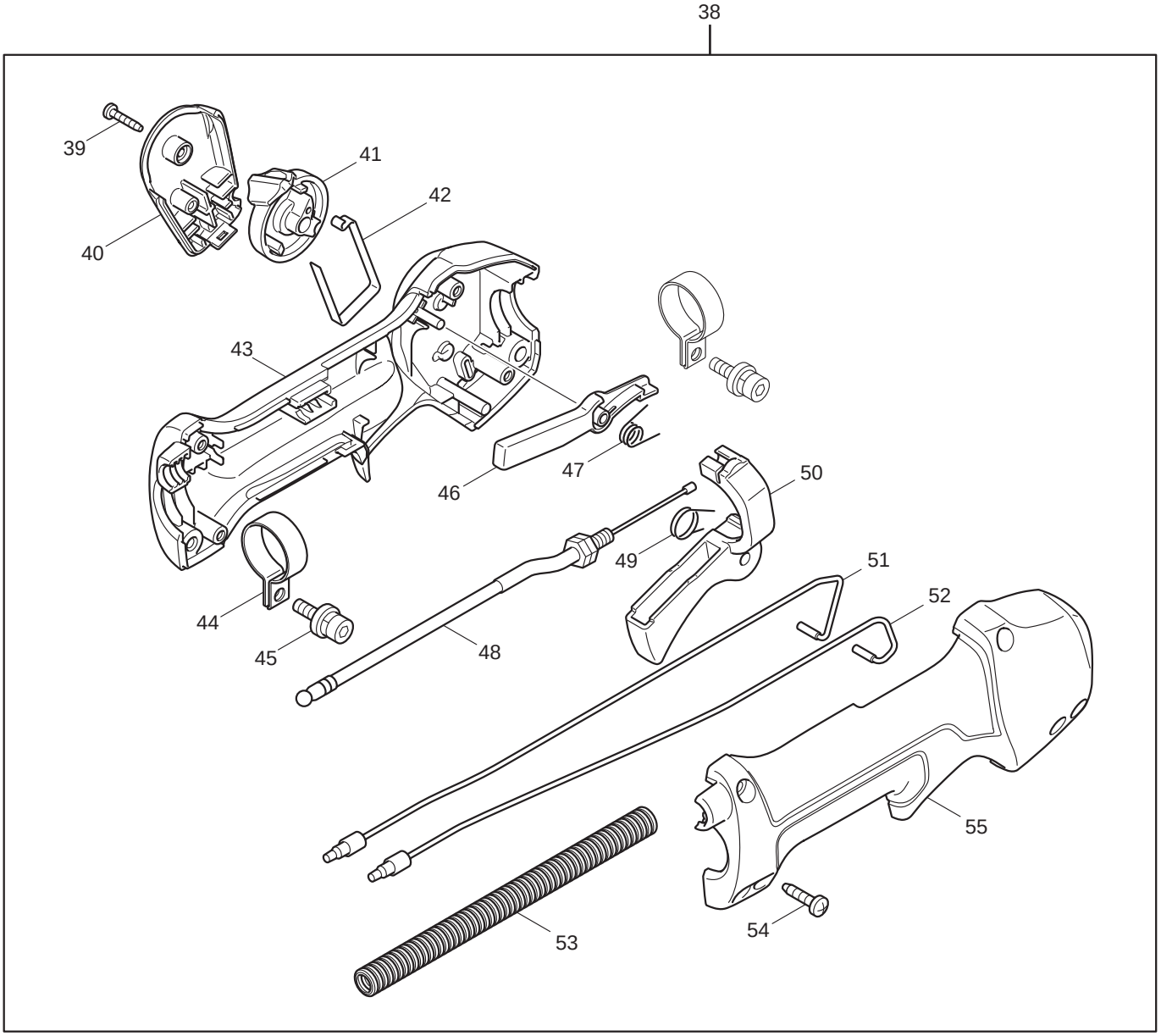
38
39
40
41
42
43
44
45
46
47
48
49
50
51
52
53
54
55

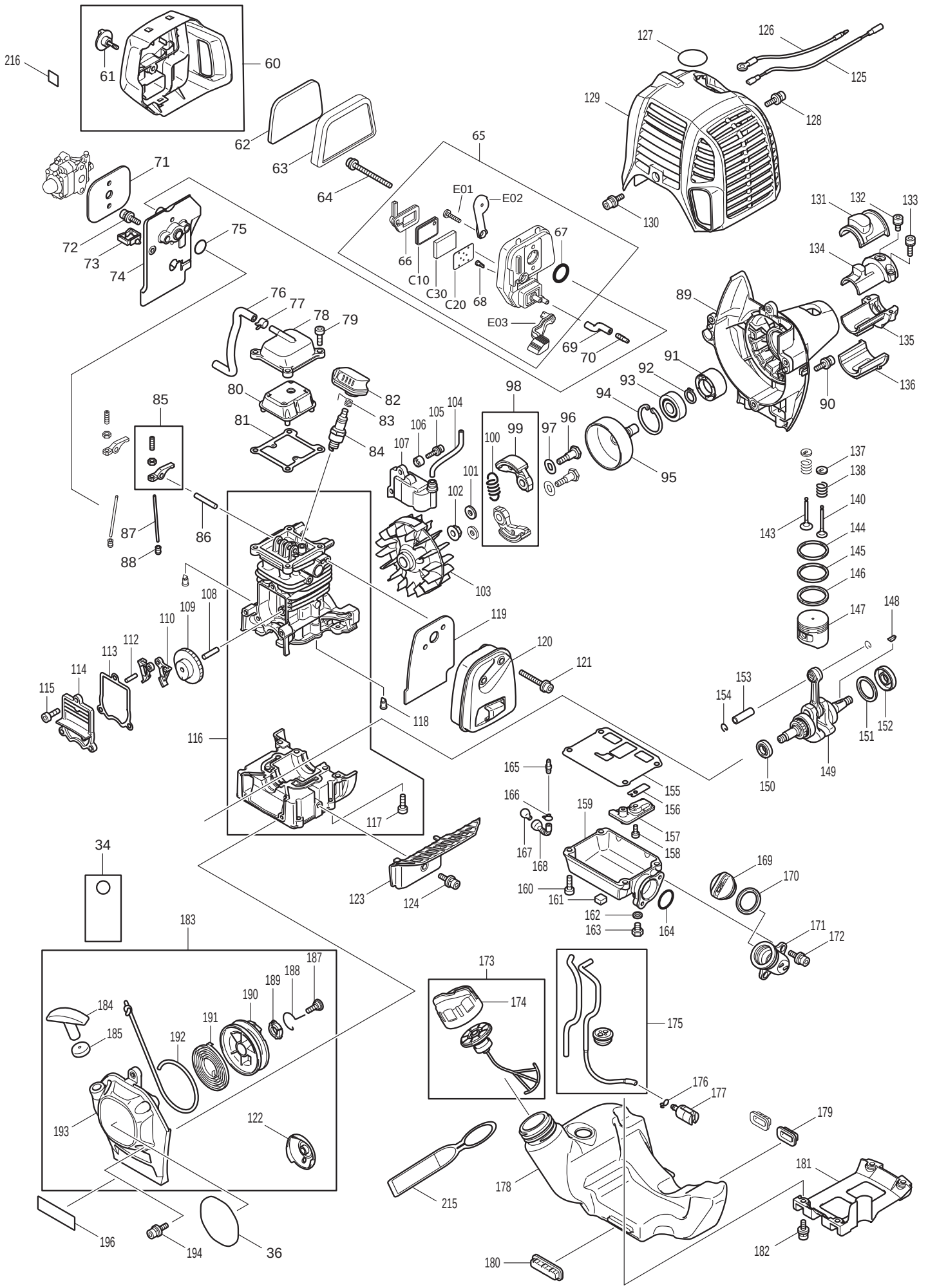
216
61
60
62
63
64
65
E01
E02
66
C10
C30
C20
68
67
E03
69
70
71
72
73
74
75
76
77
78
79
80
81
82
83
84
85
86
87
88
89
90
91
92
93
94
95
96
97
98
99
100
101
102
103
104
105
106
107
108
109
110
112
113
114
115
116
117
118
119
120
121
122
123
124
125
126
127
128
129
130
131
132
133
134
135
136
137
138
140
143
144
145
146
147
148
149
150
151
152
153
154
155
156
157
158
159
160
161
162
163
164
165
166
167
168
169
170
171
172
173
174
175
176
177
178
179
180
181
182
183
184
185
187
188
189
190
191
192
193
194
196
215
34
36

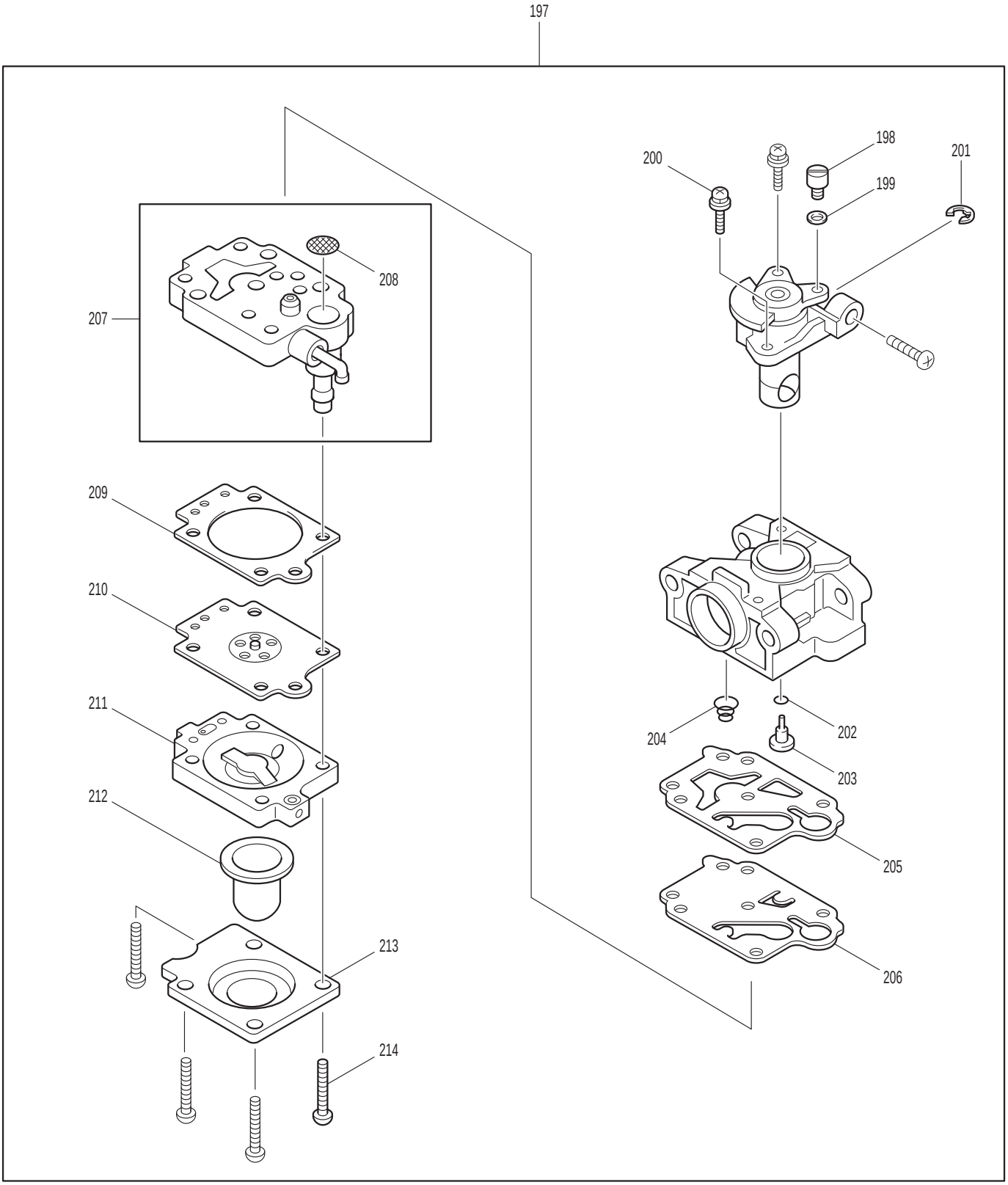
197
198
200
201
199
208
207
209
210
211
212
213
214
204
202
203
205
206

Products with multiple versions are listed in subsiding order with the newest version on top not indented.

Corresponding bulletins are attached. Select bulletin name or attachment to view.

Tech Bulletin	Fig. No.	Part No.	Description	Q'ty	Unit	Notes
	4	195143-2	HANGER SET	1		INC. 5
	5	911233-1	PAN HEAD SCREW M5X20	1		
	6	140431-2	SHAFT PIPE COMPLETE	1		
	7	890281-2	CAUTION LABEL	1		
	8	819312-8	MAKITA LOGO LABEL	1		
	9	324893-4	SHAFT	1		
	10	922218-2	H.S.H.BOLT M5X14 WITH WR	2		
	11	126102-5	GEAR CASE ASSEMBLY	1		INC. 14-20,23-25,28
	14	210049-4	BALL BEARING 609ZZ	1		
	15	961005-4	RETAINING RING S-9	1		
	16	962103-7	RETAINING RING R-24	1		
	17	922241-7	HEX. SOCKET HEAD BOLT M5X25	1		
	18	265590-2	+HEX.BOLT M8X10 WITH R	1		
	20	188902-1	CUTTER SHAFT SET	1		
	23	210115-7	BALL BEARING 6001LLU	1		
	24	962106-1	RETAINING RING R-28	1		
	25	331861-0	RECEIVE WASHER	1		
	32	346073-2	PROTECTOR CLAMP, EM2650LH	1		
	34	819432-8	CAUTION TAG	1		
	36	819766-9	EM2650LH MODEL NO.LABEL	1		
	38	125776-9	CONTROL LEVER ASSEMBLY	1		INC. 39-55
	39	266130-9	TAPPING SCREW BIND PT 3X16	1		
	40	451595-0	SWITCH COVER	1		
	41	451594-2	SWITCH LEVER	1		
	42	232251-9	LEAF SPRING	1		
	43	188832-6	LEVER CASE SET	1		INC. 55
	44	346248-3	PIPE CLAMP 24	2		
	45	922218-2	H.S.H.BOLT M5X14 WITH WR	2		
	46	451593-4	LOCK LEVER	1		
	47	233541-3	TORSION SPRING 7	1		
	48	168571-4	CONTROL CABLE	1		
	49	233540-5	TORSION SPRING 11	1		
	50	451592-6	THROTTLE LEVER	1		
	51	638714-7	LEAD UNIT (LONG,MALE)	1		
	52	638713-9	LEAD UNIT (SHORT,FEMALE)	1		
	53	452071-7	CORRUGATE TUBE	1		
	54	266326-2	TAPPING SCREW 4X18	4		
	55	188832-6	LEVER CASE SET	1		INC. 43
	60	125746-8	CLEANER COVER ASSEMBLY	1		INC. 61
	61	265791-2	THUMB SCREW M4	1		
	62	443171-4	AIR CLEANER ELEMENT	1		
	63	443169-1	AIR CLEANER ELEMENT	1		
	64	266618-9	H.S.BUTTON HEAD BOLT M5X60	2		
	65	126004-5	CLEANER PLATE ASSEMBLY	1		INC. 66-68, C10-C30, E01-E03
	C10	162322-7	SEPARATOR STOPPER	1		
	C20	162325-1	SEPARATOR GASKET	1		
	C30	352013-0	SEPARATOR NET	1		
	66	162324-3	SEPARATOR PLATE	1		

Products with multiple versions are listed in subsiding order with the newest version on top not indented.

Corresponding bulletins are attached. Select bulletin name or attachment to view.

Tech Bulletin	Fig. No.	Part No.	Description	Q'ty	Unit	Notes
	67	213540-1	O RING 15	1		
	68	424316-3	CHECK VALVE	1		
	69	422062-2	PIPE	1		
	70	325665-0	JOINT PIPE	1		
	71	442153-3	CARBURETOR GASKET	1		
	72	922228-9	H.S.H.BOLT M5X18 WITH WR	2		
	73	451825-9	CLAMP	1		
	74	451729-5	INSULATOR	1		
	75	213547-7	O-RING 12	1		
	76	422055-9	BREATHER PIPE	1		
	77	345918-1	HOSE CLAMP	1		
	78	318745-9	ROCKER COVER OUTER	1		
	79	922222-1	HEX. SOCKET HEAD BOLT M5X16	4		
	80	452795-5	ROCKER COVER INNER	1		
	81	162304-9	ROCKER COVER GASKET	1		
	82	424302-4	PLUG CAP	1		
	83	324891-8	PLUG CAP SPRING	1		
	84	168534-0	SPARK PLUG	1		
	85	125554-7	ROCKER ARM ASSEMBLY	2		
	86	256200-2	PIN 5	1		
	87	256865-0	ROD 2.5	2		
	88	424200-2	SPACER, EM2650LH	2		
	89	451735-0	CLUTCH CASE	1		
	90	922228-9	H.S.H.BOLT M5X18 WITH WR	3		
	91	450569-8	SPACER	1		
	92	961052-5	RETAINING RING S-12	1		
	93	210111-5	BALL BEARING 6201LLU	1		
	94	962151-6	RETAINING RING R-32	1		
	95	168609-5	CLUTCH DRUM	1		
	96	266457-7	SHOULDER HEX. BOLT M6X25	2		
	97	267817-6	WASHER 8	2		
	98	125518-1	CLUTCH ASSEMBLY	1		INC. 99,100
	99	168498-8	CLUTCH SHOE	2		
	100	231858-8	TENSION SPRING 6	1		
	101	267812-6	WASHER 6	2		
	102	264039-9	FRANGE NUT	1		
	103	318569-3	FLYWHEEL	1		
	104	444021-6	TUBE	1		
	105	266602-4	HEX. SOCKET HEAD BOLT M4X20	2		
	106	452049-0	SPACER	2		
	107	168559-4	IGNITION COIL	1		
	108	268238-5	PIN 5	1		
	109	125552-1	CAM GEAR ASSEMBLY	1		
	110	313169-4	CAM LIFTER	2		
	112	268239-3	PIN 4	1		
	113	162274-2	CAM GEAR COVER GASKET	1		
	114	318443-5	CAM GEAR COVER	1		
	115	922222-1	HEX. SOCKET HEAD BOLT M5X16	3		

Products with multiple versions are listed in subsiding order with the newest version on top not indented.

Corresponding bulletins are attached. Select bulletin name or attachment to view.

Tech Bulletin	Fig. No.	Part No.	Description	Q'ty	Unit	Notes
	116	135478-9	CYLINDER BLOCK ASSEMBLY	1	INC. 117	
	117	922222-1	HEX. SOCKET HEAD BOLT M5X16	6		
	118	424201-0	CHECK VALVE	2		
	119	346331-6	MUFFLER GASKET	1		
	120	168554-4	EXHAUST MUFFLER	1		
	121	266440-4	HEX SOCKET HEAD BOLT M5X40	2		
	122	168483-1	PULLEY	1		
	123	451731-8	MUFFLER PLATE	1		
	124	922218-2	H.S.H.BOLT M5X14 WITH WR	1		
	125	638707-4	LEAD UNIT	1		
	126	638708-2	LEAD UNIT	1		
	127	808633-3	4STROKE INDICATION LABEL	1		
	128	922218-2	H.S.H.BOLT M5X14 WITH WR	1		
	129	453266-5	CYLINDER COVER, EM2650LH	1		
	129	451734-2	CYLINDER COVER	1		
	130	922218-2	H.S.H.BOLT M5X14 WITH WR	1		
	131	424082-2	BUFFER RUBBER	1		
	132	922211-6	HEX. SOCKET HEAD BOLT M5X12	1		
	133	922226-3	HEX. SOCKET HEAD BOLT M5X18	2		
	134	318249-1	PIPE HOLDER	1		
	135	318250-6	PIPE HOLDER	1		
	136	424083-0	BUFFER RUBBER	1		
	137	325668-4	SPRING RETAINER	2		
	138	234108-0	COMPRESSION SPRING 9	2		
	140	325669-2	EXHAUST VALVE	1		
	143	325670-7	INTAKE VALVE	1		
	144	257298-2	PISTON RING (TOP) 34	1		
	145	257299-0	PISTON RING (SECOND) 34	1		
	146	257300-1	PISTON RING 34	1		
	147	318441-9	PISTON	1		
	148	254040-2	WOODRUFF KEY 3	1		
	149	135481-0	CRANK SHAFT ASS'Y	1		
	150	213148-1	OIL SEAL 10	1		
	151	267400-9	FLAT WASHER 23	1		
	152	213147-3	OIL SEAL 12	1		
	153	257781-9	PISTON PIN	1		
	154	233976-8	CLIP	2		
	155	162323-5	OIL CASE GASKET	1		
	156	346083-9	LEAD VALVE	1		
	157	318590-2	RETAINER PLATE	1		
	158	922112-8	HEX. SOCKET HEAD BOLT M4X10	1		
	159	318588-9	OIL CASE	1		
	160	922222-1	HEX. SOCKET HEAD BOLT M5X16	4		
	161	424344-8	DAMPER	1		
	162	346305-7	GASKET	1		
	163	266611-3	HEX BOLT M6X8	1		
	164	213548-5	O-RING 20	1		
	165	325665-0	JOINT PIPE	1		

Products with multiple versions are listed in subsiding order with the newest version on top not indented.
Corresponding bulletins are attached. Select bulletin name or attachment to view.

Tech Bulletin	Fig. No.	Part No.	Description	Q'ty	Unit	Notes
	166	282020-8	HOSE CLAMP	1		
	167	325666-8	OIL WEIGHT	1		
	168	424301-6	OIL TUBE	1		
	169	452047-4	OIL CAP	1		
	170	424343-0	GASKET	1		
	171	452048-2	OIL PIPE	1		
	172	922218-2	H.S.H.BOLT M5X14 WITH WR	2		
	173	125728-0	FUEL TANK CAP ASSEMBLY	1		INC. 174
	174	451739-2	FUEL TANK CAP	1		
	175	168555-2	TUBE COMPLETE	1		
	176	282020-8	HOSE CLAMP	1		
	177	163518-3	GASOLIN FILTER	1		
	178	452249-2	FUEL TANK	1		
	179	424080-6	BUFFER RUBBER	2		
	180	424081-4	BUFFER RUBBER	1		
	181	451737-6	TANK GUARD	1		
	182	922218-2	H.S.H.BOLT M5X14 WITH WR	4		
	183	195308-6	RECOIL STARTER SET, EM2650LH	1		
	183	125752-3	RECOIL STARTER ASSEMBLY	1		INC. 122,184,185,187-193
	184	424319-7	STARTER KNOB	1		
	185	424359-5	DAMPER	1		
	187	266585-8	TAPPING SCREW 5X12	1		
	188	325923-4	SWING ARM	1		
	189	451938-6	COLLAR	1		
	190	451937-8	REEL	1		
	191	232258-5	SPIRAL SPRING	1		
	192	444023-2	STARTER ROPE	1		
	193	451733-4	STARTER CASE	1		
	194	922223-9	H.S.H.BOLT M5X16 WITH WR	4		
	196	816565-0	MAKITA LOGO LABEL	1		
	197	168591-8	CARBURETOR	1		INC. 198-207,209-214
	198	325922-6	SWIVEL	1		
	199	413140-9	WASHER	1		
	200	266581-6	PAN HEAD SCREW M3X8 WITH W	2		
	201	257964-1	STOP RING E-3	1		
	202	213538-8	O RING 2	1		
	203	325985-2	JET	1		
	204	234183-6	CONICAL COMPRESSION SPRING 5-	1		
	205	442155-9	PUMP GASKET	1		
	206	168575-6	PUMP DIAPHRAGM	1		
	207	140437-0	PUMP BODY	1		
	208	352010-6	INLET SCREEN	1		
	209	442154-1	METERING DIAPHRAGM GASKET	1		
	210	168620-7	METERING DIAPHRAGM	1		
	211	140438-8	AIR PURGE BODY	1		
	212	424314-7	PRIMER PUMP	1		
	213	346270-0	PRIMER PUMP COVER	1		
	214	266582-4	TAPPING SCREW 3X24	4		

Products with multiple versions are listed in subsiding order with the newest version on top not indented.
Corresponding bulletins are attached. Select bulletin name or attachment to view.

Tech Bulletin	Fig. No.	Part No.	Description	Q'ty	Unit	Notes
	215	810455-9	CAUTION PLATE	1		
	216	891985-9	INDICATION LABEL	1		
	218	443170-6	FELT	1		
	225	346467-1	PIPE CLAMP 24	1		
	226	346468-9	PIPE CLAMP 33	1		
	227	452843-0	CLAMP COVER B	1		
	228	922243-3	HEX. SOCKET HEAD BOLT M5X25	2		
	229	266575-1	HEX. HEAD BOLT M6X30	2		
	A03	782233-6	BOX DRIVER 10-16	1		
	A05	783223-2	WRENCH 4	1		
	A06	831304-7	ACCESSORY BAG	1		
	A07	195149-0	CUTTER ASSEMBLY SET	1		
	A08	195626-2	LOOP HANDLE SET	1		
	A09	195780-2	PROTECTOR SET	1		Includes fig no. 229
	E01	266427-6	TAPPING SCREW 4X12	1		
	E02	452219-1	CHOKE PLATE	1		
	E03	452220-6	CHOKE LEVER	1		