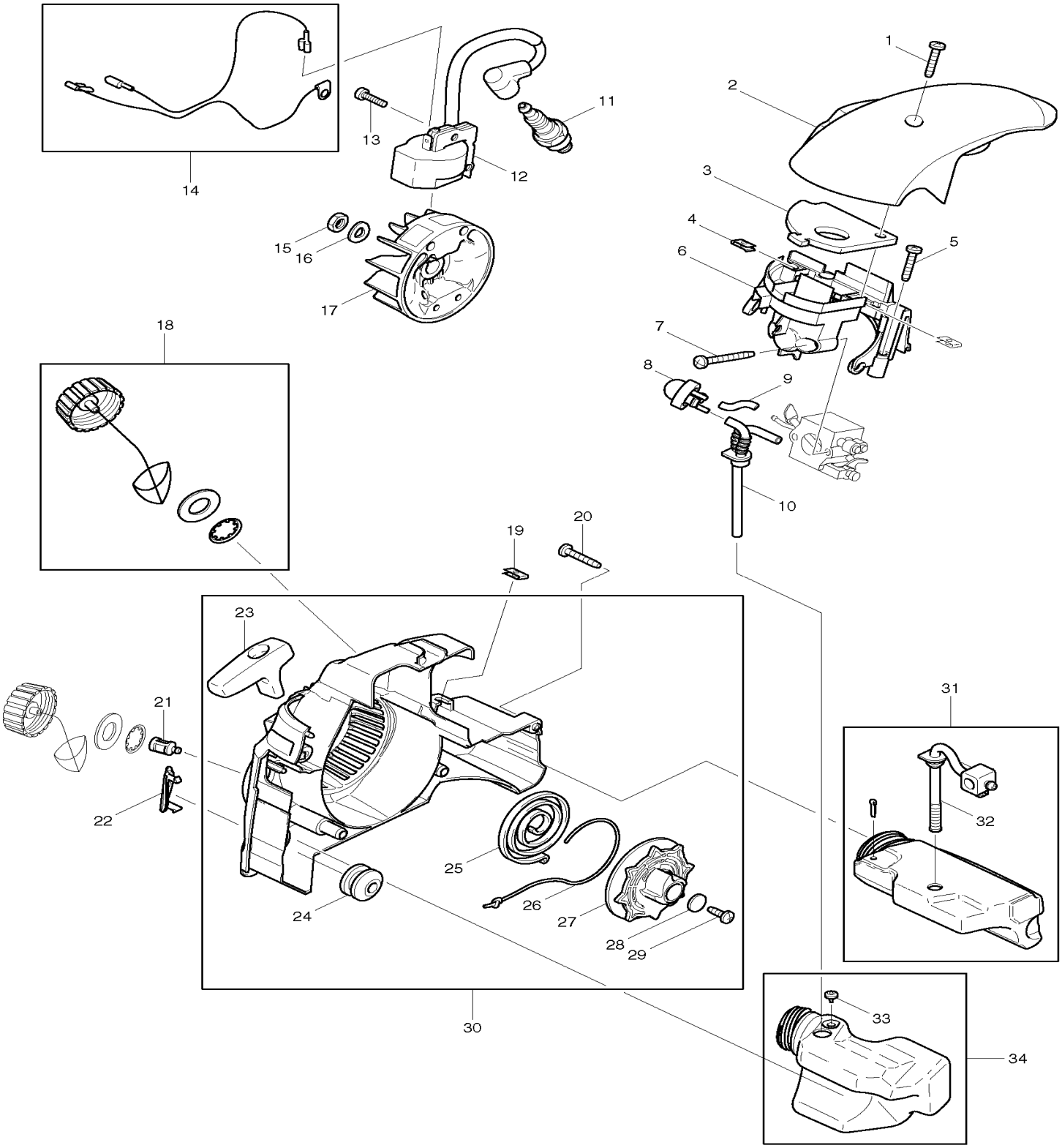
1
2
3
4
5
6
7
8
9
10
11
12
13
14
15
16
17
18
19
20
21
22
23
24
25
26
27
28
29
30
31
32
33
34

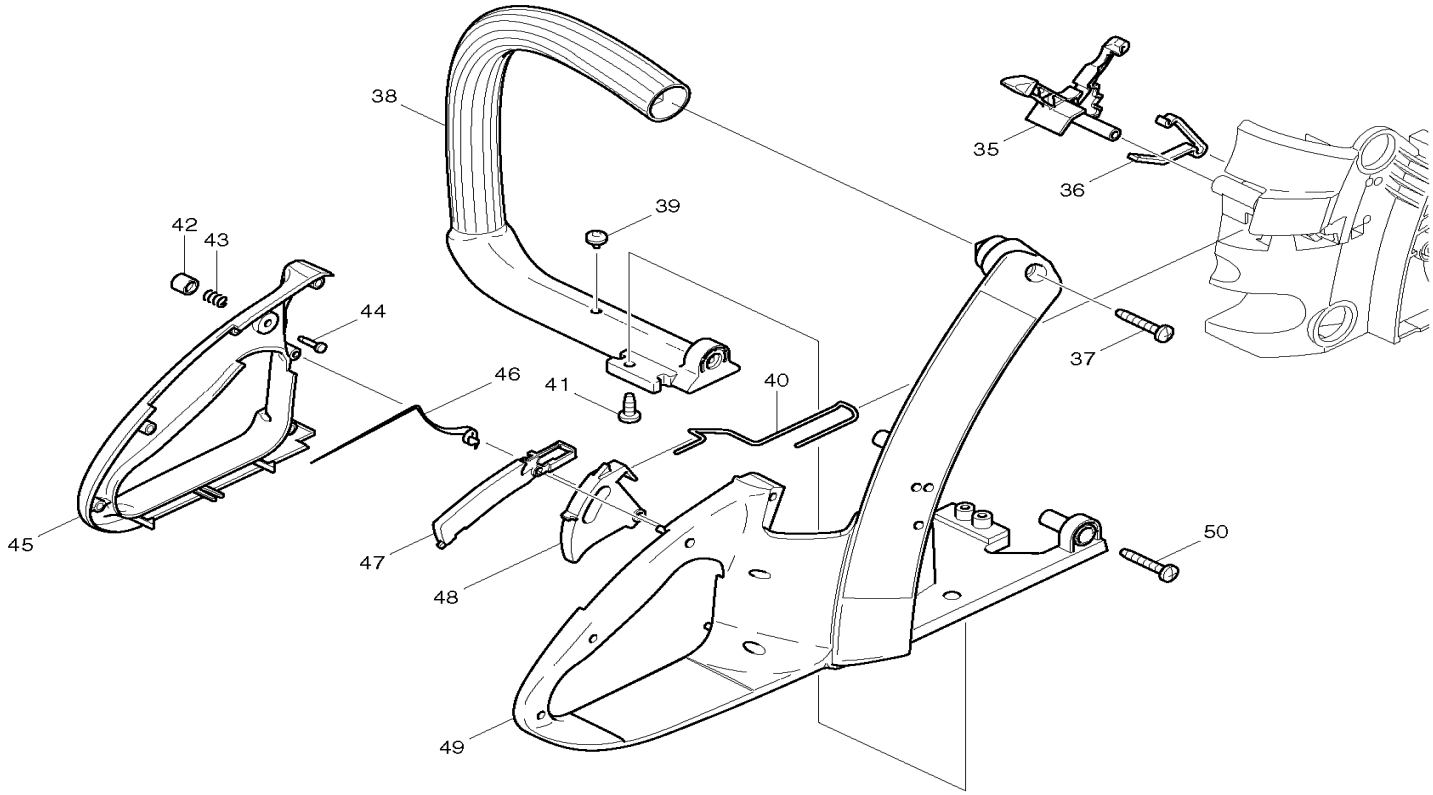
38
35
36
39
42
43
44
37
46
41
40
45
47
48
50
49

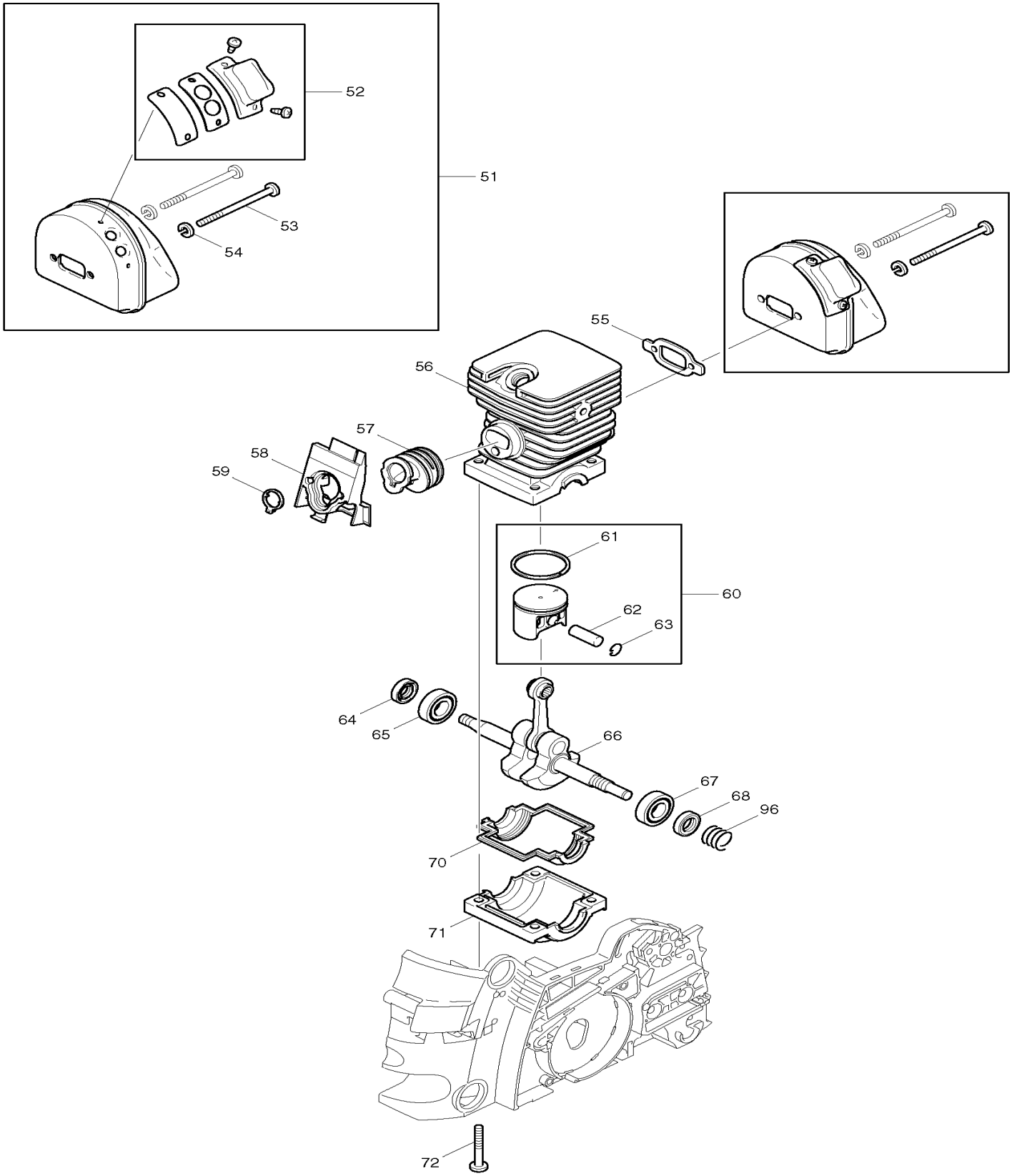
52
51
53
54
55
56
57
58
59
61
60
62
63
64
65
66
67
68
96
70
71
72

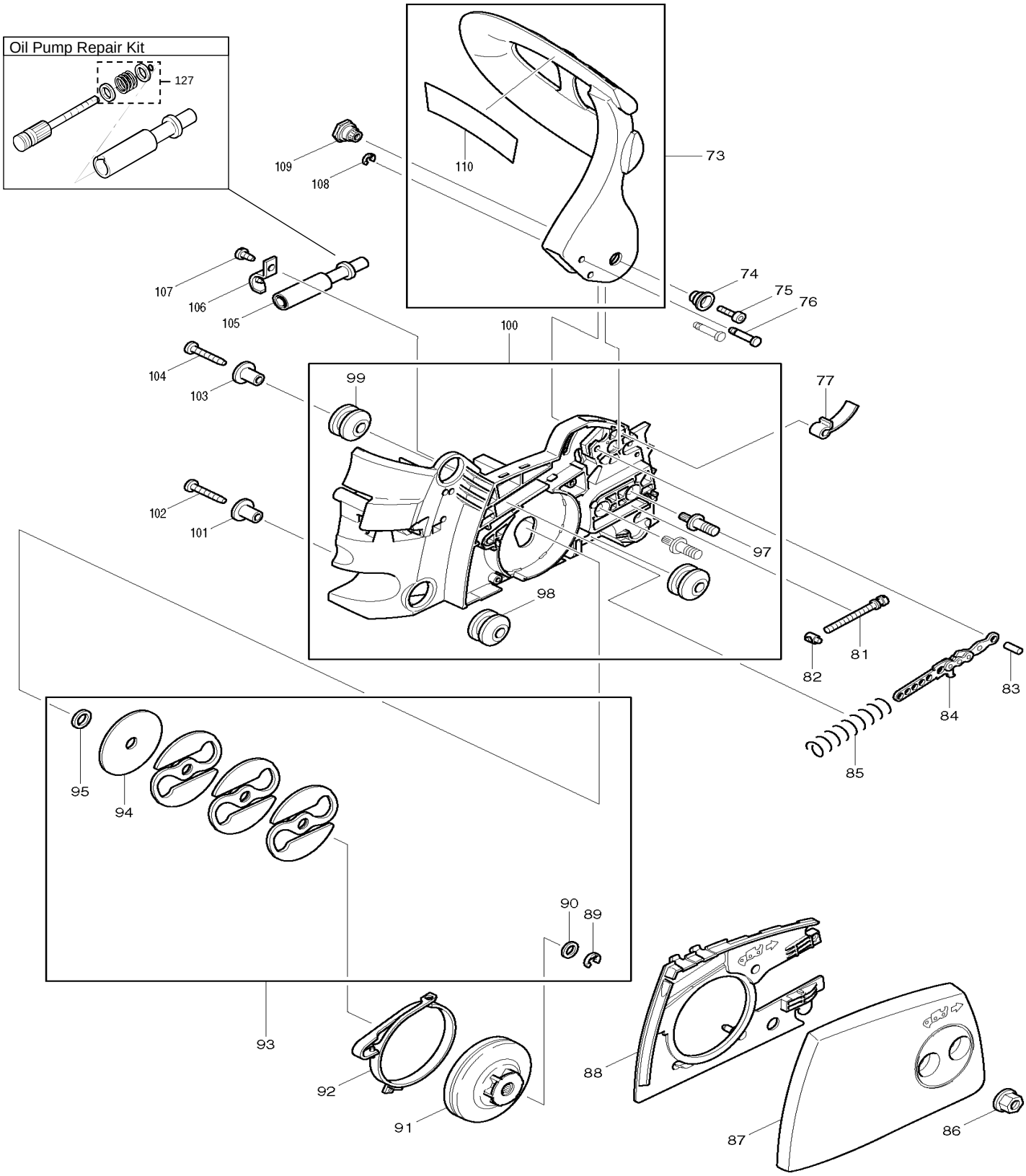
Oil Pump Repair Kit
127
109
108
110
73
107
106
105
74
75
76
100
104
103
99
77
102
101
97
98
81
82
83
84
85
95
94
90
89
93
92
91
88
87
86

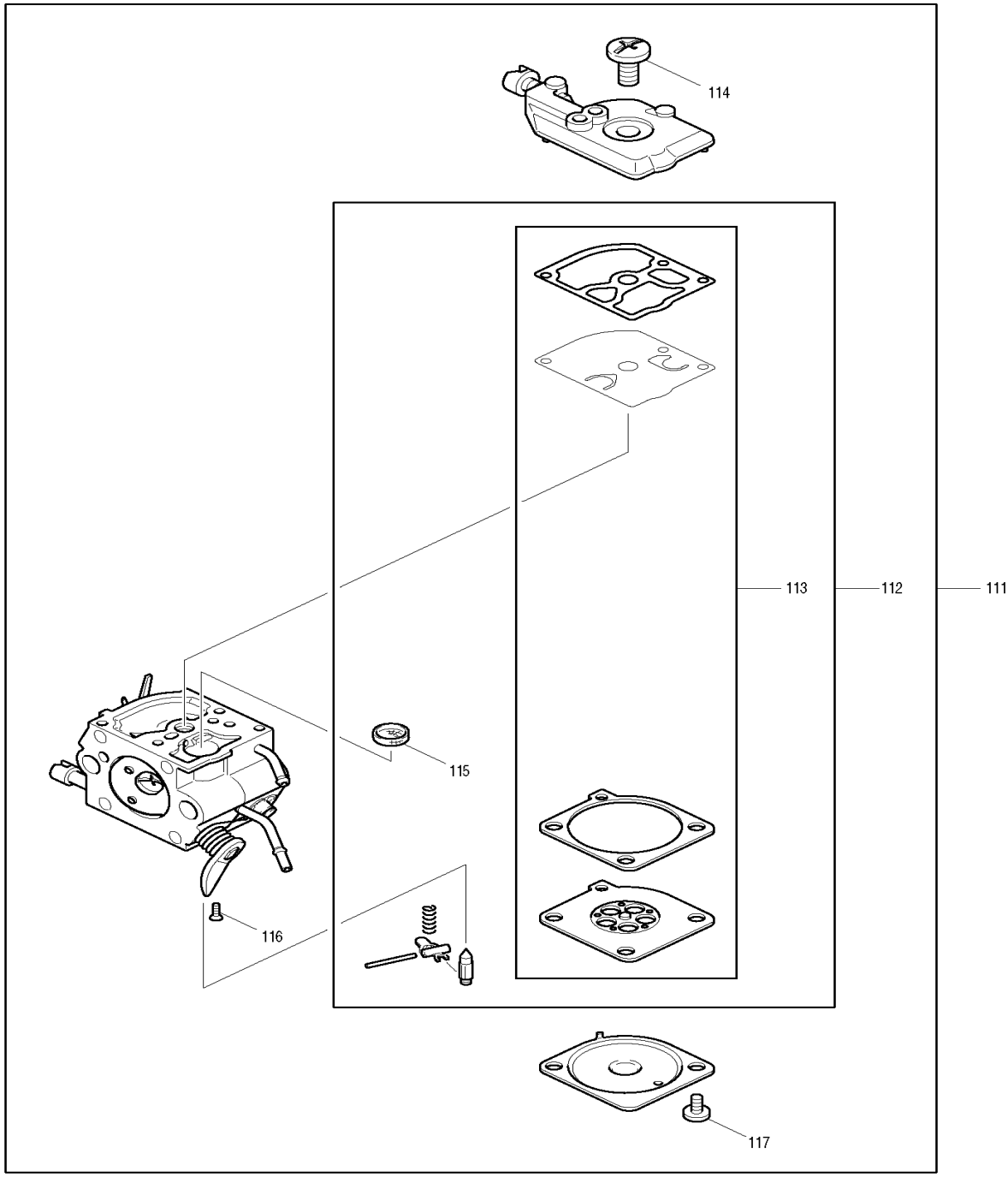
114
113
112
111
115
116
117

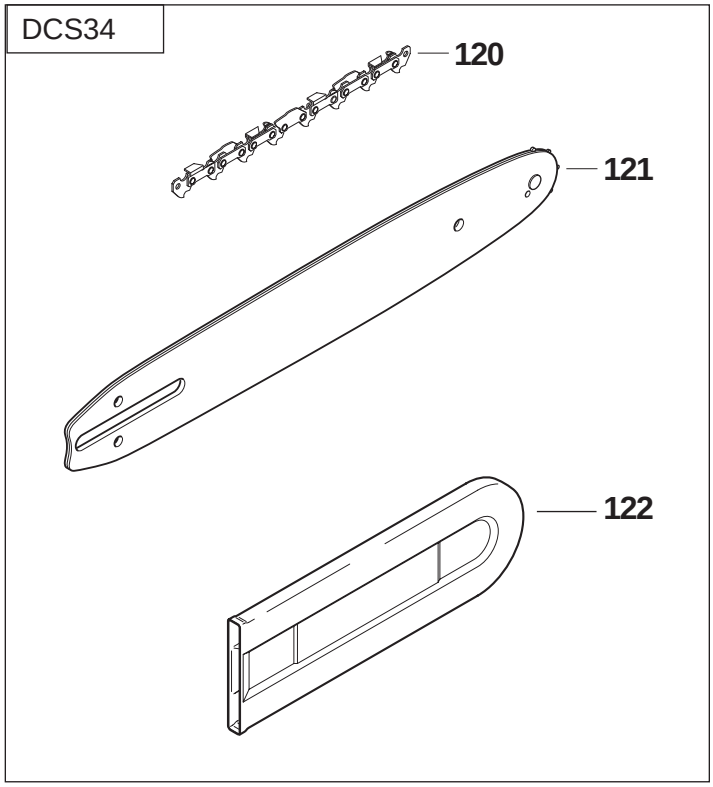
DCS34
120
121
122

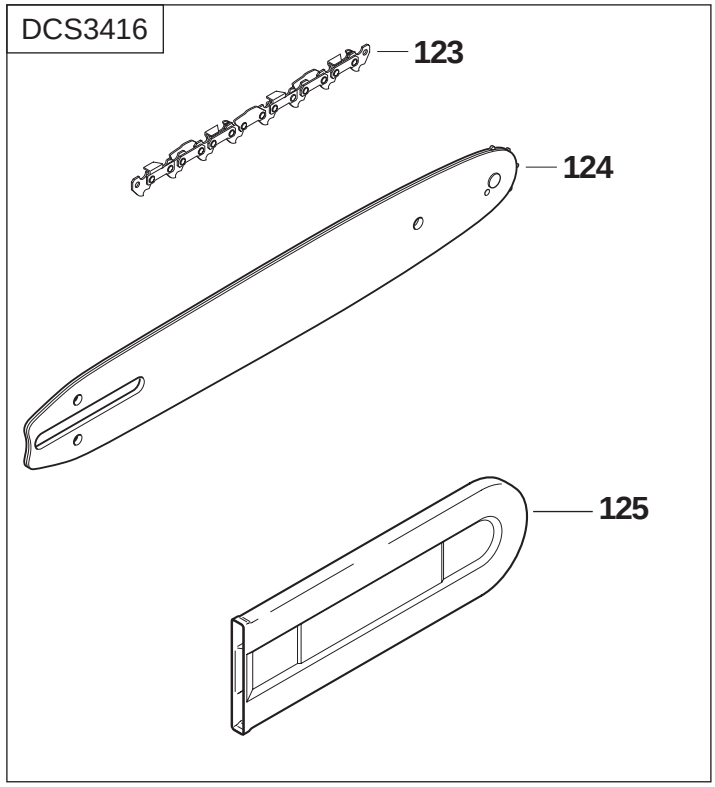
DCS3416
123
124
125

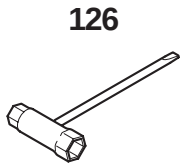
126

Products with multiple versions are listed in subsiding order with the newest version on top not indented.

Corresponding bulletins are attached. Select bulletin name or attchment to view.

Tech Bulletins	Fig. No.	Part No.	Description	Q'ty Unit
	1	913-650-304	SCREW 5X30, DCS34	3
	2	036-118-020	HOOD (GREY), DCS34	1
	3	036-173-011	AIR FILTER	1
	4	923-750-340	NUT, DCS34	2
	5	913-650-304	SCREW 5X30, DCS34	2
	6	036-171-011	CONNECTING MUFF, DCS34	1
	7	913-650-504	SCREW 5X50, DCS34	2
	8	369-155-010	PRIMER, DCS34	1
	9	965-452-080	VENTILATION LINE, DCS9000	1
	9	965-452-060	VENTILATION LINE, DCS9000	1
	10	965-404-980	FUEL LINE, DCS34	1
	11	965-603-021	SPARK PLUG,WSR5F DPC6200	1
2005-06	12	036-140-020	IGNITION ELECTRONIC CPL., DCS34	1
	12	036-143-020	IGNITION COIL, DCS34	1
	12	036-140-010	IGNITION ELECTRONIC CPL., DCS34	1
	13	913-340-204	SCREW 4X20, DCS34	2
	14	970-311-490	SHORT-CIRCUIT CABLE, DCS34	1
	15	920-308-024	HEX NUT M8X1, DCS340	1
	16	926-208-001	SPRING WASHER 8, DPC7000	1
2005-06	17	036-140-020	IGNITION ELECTRONIC CPL., DCS34	1
	17	036-141-120	FLYWHEEL, DCS34	1
	17	036-141-102	FLYWHEEL W/STARTER RATCH CPL.,DCS34	1
	17	036-141-100	FLYWHEEL W/STARTER RATCH CPL.,DCS34	1
	18	010-114-063	TANK PLUG CPL., DCS34	2
	18	010-114-062	TANK PLUG CPL., DCS34	2
	18	010-114-060	TANK PLUG CPL., DCS34	2
	19	923-750-340	NUT, DCS34	1
	20	913-650-304	SCREW 5X30, DCS34	4
	21	963-601-380	SUCTION HEAD, DCS34	1
	22	036-112-631	COVER, DCS34	1
	22	036-112-630	COVER, DCS34	1
	23	965-404-031	STARTER GRIP, DCS340	1
	24	965-403-491	RUBBER BUFFER, DCS341	1
	24	965-403-490	RUBBER BUFFER, DCS341	1
	25	036-163-010	REWIND SPRING. DCS34	1
	26	985-000-155	STARTER ROPE 100 METER,DCS431	1
	27	036-162-010	CABLE DRUM, DCS34	1
	28	924-805-310	DISC (WASHER), DCS430	1
	29	913-650-154	SCREW 5X15, DCS34	1
	30	036-112-652	STARTER COMPLETE, DCS34	1
	30	036-112-651	STARTER CPL., DCS34	1
	30	036-112-650	STARTER CPL., DCS34	1
	31	036-114-102	OIL TANK CPL., DCS34	1
	31	036-114-101	OIL TANK CPL., DCS34	1
	31	036-114-100	OIL TANK CPL., DCS34	1
	32	965-402-490	SUCTION LINE ASSY FOR OIL, DCS34	1
	33	965-404-220	VENT VALVE, DCS330S,430	1
	34	036-114-151	FUEL TANK CPL., DCS34	1
	34	036-114-150	FUEL TANK CPL., DCS34	1

Products with multiple versions are listed in subsiding order with the newest version on top not indented.

Corresponding bulletins are attached. Select bulletin name or attchment to view.

Tech Bulletins	Fig. No.	Part No.	Description	Q'ty Unit
2008-08M	35	036-155-020	CHOKE LEVER, DCS34	1
	36	036-155-032	CONTACT SPRING, DCS34	1
	36	036-155-031	CONTACT SPRING, DCS34	1
	37	913-650-304	SCREW 5X30, DCS34	1
	38	036-310-012	TUBULAR HANDLE, DCS34	1
	38	036-310-010	TUBULAR HANDLE, DCS34	1
	39	965-402-360	RUBBER BUFFER, DPC7000	1
	40	036-117-020	THROTTLE LINKAGE, DCS34	1
	41	913-650-154	SCREW 5X15, DCS34	1
	42	965-451-750	BUTTON, DCS6000I21	1
	43	965-551-160	PRESSURE SPRING, DCS6000I21	1
	44	965-551-150	STOP PIN, DCS6000I21	1
	45	036-117-601	HANDLE CPL. BLUE, DCS34	1
	45	036-117-600	HANDLE HALF, DCS34	1
	45	036-117-661	HANDLE HALF, DCS34	1
	45	036-117-660	HANDLE HALF, DCS34	1
	46	036-117-051	SPRING,DCS34	1
	46	036-117-050	SPRING,DCS34	1
	47	036-117-040	CATCH LEVER, DCS34	1
	48	036-117-030	THROTTLE LEVER, DCS34	1
	49	036-117-611	HANDLE HALF, DCS34	1
	49	036-117-610	HANDLE HALF, DCS34	1
	50	913-650-304	SCREW 5X30, DCS34	1
	51	036-174-110	SPARK ARREST. MUFFLER ASSY., DCS34	1
	52	036-174-200	SPARK ARRESTER SCREEN CPL., DCS34	1
	53	913-350-654	SCREW 5X65, DCS34	2
	54	928-405-000	WASHER, DCS340	2
	55	965-522-032	GASKET, DCS5200I	1
	56	036-131-013	CYLINDER, DCS34	1
	56	036-131-011	CYLINDER, DCS34	1
	57	036-131-021	SUCTION HOSE, DCS34	1
	57	036-131-020	SUCTION HOSE, DCS34	1
	58	036-171-020	CLAMP, DCS34	1
	59	036-131-030	INSERT FOR SUCTION HOSE, DCS34	1
	60	021-132-110	PISTON ASS'Y, DCS341	1
	61	021-132-030	PISTON RING, DS340	1
	62	021-132-020	PISTON PIN, DCS340	1
	63	108-132-050	SPRING RING, DCS340	1
	64	962-900-057	RADIAL RING, DCS34	1
	65	960-102-129	BALL BEARING, DCS431	1
	66	036-120-021	CRANKSHAFT ASSY., DCS34	1
	66	036-120-010	CRANKSHAFT ASSY., DCS34	1
	67	960-102-129	BALL BEARING, DCS431	1
	68	962-900-057	RADIAL RING, DCS34	1
	70	965-531-020	GASKET, DCS34	1
	70	965-531-010	GASKET, DCS34	1
	71	036-111-020	CRANKCASE LOWER PART, DCS34	1
	71	036-111-010	CRANKCASE LOWER PART, DCS34	1
	72	913-350-404	SCREW 5X40/20, DCS34	4

Products with multiple versions are listed in subsiding order with the newest version on top not indented.

Corresponding bulletins are attached. Select bulletin name or attchment to view.

Tech Bulletins	Fig. No.	Part No.	Description	Q'ty Unit
	73	036-213-051	HAND GUARD CPL., DCS34	1
	73	036-213-120	HAND GUARD CPL., DCS34	1
	74	036-213-070	BUSH, DCS34	1
	75	908-005-165	HEAD SCREW M5X16, DCS340	1
	76	934-150-200	BOLT 5X22, DCS34	2
	77	036-213-030	SPRING, DCS34	1
	81	036-213-090	STRAINING SCREW, DCS34	1
	82	001-213-042	NUT WITH PIVOT	1
	83	962-650-128	CYLINDRICAL PIN, DCS34	1
	84	036-213-020	BREAK SPRING HOLDER CPL., DCS34	1
	85	028-213-201	SPRING, DCS34,T2	1
	85	028-213-200	SPRING, DCS34,T2	1
	86	923-208-004	HEX NUT, DCS341	2
	87	036-213-651	SPROCKET GUARD CPL., DCS34	1
	87	036-213-650	SPROCKET GUARD CPL., DCS34	1
	88	036-213-040	COVER PLATE, DCS34	1
	89	927-306-000	SAFETY WASHER , DCS6800I	1
	90	900-006-065	SPACER, DCS6800I	1
	91	036-223-115	CLUTCH DRUM CPL., DCS34	1
	91	036-223-114	CLUTCH DRUM CPL., DCS34	1
	91	036-223-112	CLUTCH DRUM CPL 3/8", DCS34	1
	91	036-223-110	CLUTCH DRUM CPL 3/8, DCS34	1
	92	028-213-501	BRAKE SPRING, DCS341	1
	93	036-114-020	FIXING BUSH, DCS34	1
	94	027-182-031	STOP DISC, DCS5200I	1
	94	027-182-030	STOP DISC, DCS5200I	1
	95	036-224-010	WASHER 10/16X2.5, DCS34	1
	96	036-245-020	WORM, DCS34	1
	97	036-110-020	BOLT, DCS34	1
	98	965-403-491	RUBBER BUFFER, DCS341	2
	98	965-403-490	RUBBER BUFFER, DCS341	2
	99	965-403-491	RUBBER BUFFER, DCS341	1
	99	965-403-490	RUBBER BUFFER, DCS341	1
	100	036-110-603	MOTOR HOUSING COMPLETE, DCS34	1
	100	036-110-602	MOTOR HOUSING CPL., DCS34	1
	100	036-110-600	MOTOR HOUSING CPL., DCS34	1
	101	036-114-020	FIXING BUSH, DCS34	1
	102	913-650-304	SCREW 5X30, DCS34	1
	103	036-114-020	FIXING BUSH, DCS34	1
	104	913-650-304	SCREW 5X30, DCS34	1
2009-04	105	021-245-007	OIL PUMP CPL., UC4000	1
	105	021-245-006	OIL PUMP CPL., UC4000	1
2006-20	105	021-245-005	OIL PUMP, UC4000	1
	105	021-245-003	OIL PUMP CPL.,UC3500, UC4000	1
	106	203-245-002	OIL PUMP HOLDER, UC3500, UC4000	1
	106	203-245-001	OIL PUMP HOLDER, UC3500, UC4000	1
	107	915-035-060	SCREW 3.5X6.5, DCS34	1
	107	913-335-060	SCREW 3.5X6.5, DCS34	1
	108	927-304-000	SAFETY WASHER , DCS431	1

PARTS BREAKDOWN

rev 0_07/26/2010

Products with multiple versions are listed in subsiding order with the newest version on top not indented.

Corresponding bulletins are attached. Select bulletin name or attchment to view.

Tech Bulletins	Fig. No.	Part No.	Description	Q'ty Unit
	109	036-213-080	BUSH, DCS34	1
	109	036-213-081	BUSH, DCS34	1
	110	980-114-674	LABEL, DCS34	2
	111	036-153-150	CARBURETOR COMPLETE	1
	112	036-153-100	REPAIR KIT, DCS34	1
	113	036-153-110	GASKET-DIAPHRAGM KIT, DCS34	1
	114	036-153-080	SCREW, DCS34	1
	115	036-153-040	SCREEN, DCS34	1
	116	036-153-120	SCREW, DCS34	1
	117	001-153-020	SCREW, DCS34	2
	120	528-092-652	14 CHAIN, DCS34	1
	121	442-035-661	GUIDE BAR 14, DCS340	1
	122	952-010-630	14" CHAIN PROTECTION COVER, DCS34	1
	123	528-092-656	16 SAW CHAIN, DCS34-16	1
	124	442-040-661	16 GUIDE BAR, DCS34-16	1
	125	952-010-640	16" CHAIN PROTECTION COVER, DCS3416	1
	126	941-719-131	UNIVERSAL WRENCH, DCS431	1
	127	957-245-270	OIL PUMP KIT, DCS340	1