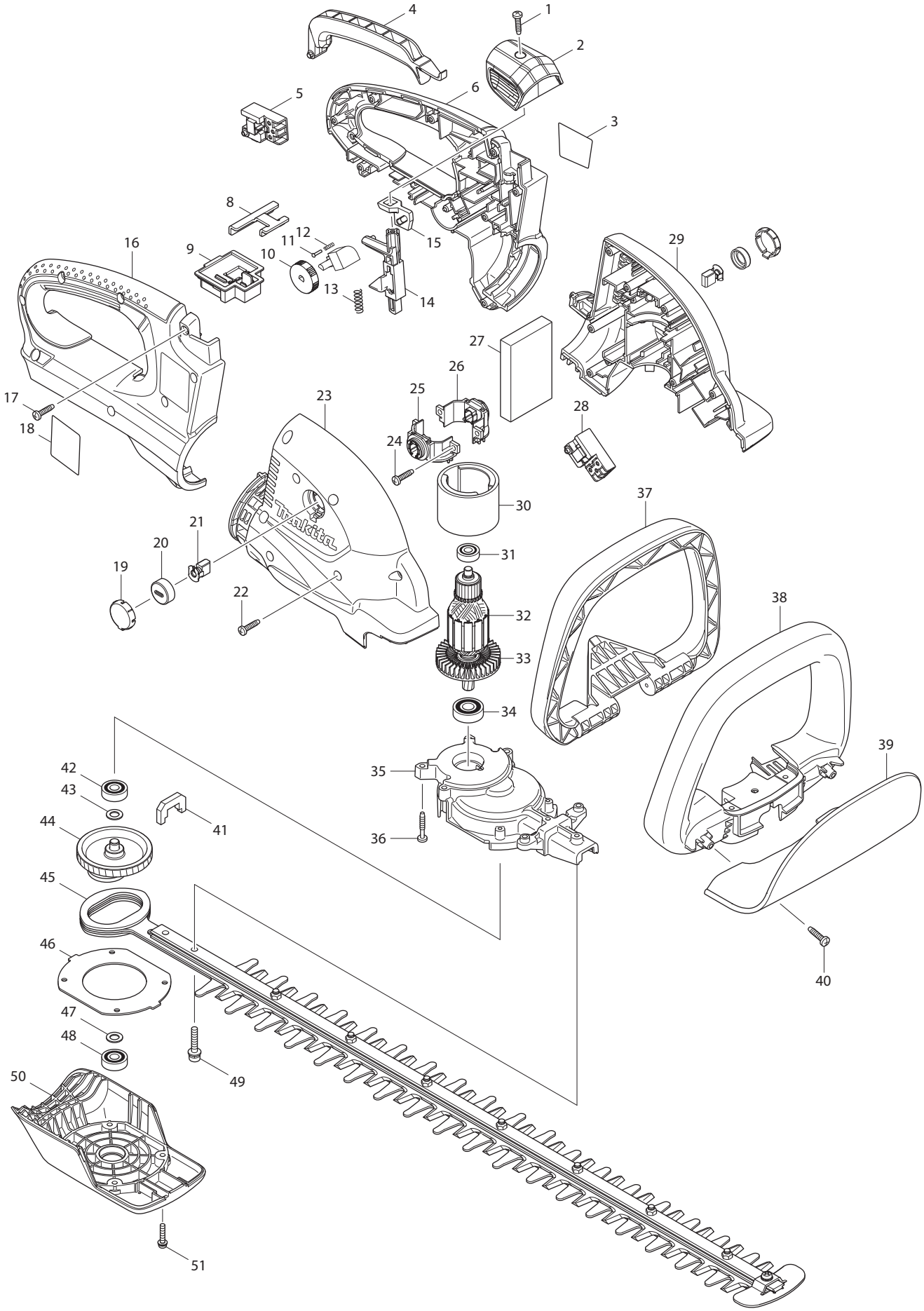
1
2
3
4
5
6
8
9
10
11
12
13
14
15
16
17
18
19
20
21
22
23
24
25
26
27
28
29
30
31
32
33
34
35
36
37
38
39
40
41
42
43
44
45
46
47
48
49
50
51

Model HHU01C1/ZX2 Parts List

A = Standard Equipment
○= Circuit Diagram

Item#		Part#	Description	Q'ty	Unit
001		265995-6	TAPPING SCREW 4X18	1	PC.
002		452164-0	KNOB	1	PC.
003		891002-5	INDICATION LABEL	1	PC.
004		454932-7	SWITCH LEVER A	1	PC.
005		650635-3	SWITCH TG73BDH	1	PC.
006		188948-7	HANDLE SET	1	PC.
	C10	263005-3	RUBBER PIN 6	2	PC.
	D10		INC. 16		
008		346039-2	SUPPORT PLATE	1	PC.
009		643849-1	TERMINAL	1	PC.
010		271427-3	DIAL 28	1	PC.
011		255058-6	RIVET 2	1	PC.
012		233002-3	COMPRESSION SPRING 3	1	PC.
013		233117-6	COMPRESSION SPRING 6	1	PC.
014		452162-4	LOCK LEVER	1	PC.
015		454933-5	SLIDER	1	PC.
016		188948-7	HANDLE SET	1	PC.
	C10	263005-3	RUBBER PIN 6	2	PC.
	D10		INC. 6		
017		265995-6	TAPPING SCREW 4X18	9	PC.
018		814R25-4	HHU01 NAME PLATE	1	
019		452145-4	HOLDER CAP COVER	2	PC.
020		643941-3	BRUSH HOLDER CAP	2	PC.
021		CB442	CARBON BRUSH SET CB-442 (195023-3)	1	SET
022		265995-6	TAPPING SCREW 4X18	8	PC.
023		188950-0	HOUSING SET	1	PC.
	C10	263025-7	RUBBER PIN 4	4	PC.
	D10		INC. 29		
024		265995-6	TAPPING SCREW 4X18	2	PC.
025		643857-2	BRUSH HOLDER	1	PC.
026		643856-4	BRUSH HOLDER	1	PC.
027		620224-8	CONTROLLER	1	
028		650635-3	SWITCH TG73BDH	1	PC.
029		188950-0	HOUSING SET	1	PC.
	C10	263025-7	RUBBER PIN 4	4	PC.
	D10		INC. 23		
030		638020-0	YOKE UNIT	1	PC.
031		211022-7	BALL BEARING 607ZZ	1	PC.
032		519261-6	ARMATURE ASSEMBLY 36V	1	PC.
	D10		INC. 31,33,34		
033		240045-8	FAN 55	1	PC.
034		211062-5	BALL BEARING 6000ZZ	1	PC.
035		140604-7	GEAR HOUSING COMPLETE	1	PC.
036		265999-8	TAPPING SCREW 4X25	6	PC.
037		452160-8	SWITCH LEVER B	1	PC.
038		452158-5	FRONT GRIP	1	PC.
039		142216-2	PROTECTOR COMPLETE	1	
	C10	801U20-1	CAUTION LABEL	1	
	C20	801U21-9	CAUTION LABEL	1	
040		265995-6	TAPPING SCREW 4X18	2	PC.

041		443142-1	DUST GUARD	1 PC.	
042		211032-4	BALL BEARING 608ZZ	1 PC.	
043		253835-0	FLAT WASHER 8	1 PC.	
044		142215-4	GEAR COMPLETE	1	
045		196689-1	SHEAR BLADE ASSEMBLY SET	1	
	C10	264013-7	HEX. LOCK NUT M5-8	7 PC.	
	C20	257766-5	SLEEVE 5	9 PC.	
	C30	265181-9	+TRUSS HEAD SCREW M5X20	7 PC.	
	C40	345205-8	BRANCH CATCHER	1 PC.	
	C50	911208-0	PAN HEAD SCREW M5X10	1 PC.	
	C60	188605-7	OIL VESSEL SET	1 PC.	
046		346325-1	PLATE	1 PC.	
047		253835-0	FLAT WASHER 8	1 PC.	
048		211032-4	BALL BEARING 608ZZ	1 PC.	
049		265182-7	+ PAN HEAD SCREW M5X25	2 PC.	
050		452156-9	UNDER COVER	1 PC.	
051		911138-5	PAN HEAD SCREW M4X20	4 PC.	
A01		450490-1	BLADE COVER	1 PC.	
A02		***DC36WA	DC36WA BATTERY CHARGER	1 PC.	(HHU01C1)
A02A		BCV02	BATTERY CONVERTER SET (195850-7)	1 PC.	(HHU01ZX2)
A03		BL3622A	BATTERY BL3622A SET (195411-3)	1 PC.	(HHU01C1)
A04		451153-2	BATTERY COVER	1 PC.	(HHU01C1)
D01		654208-4	RECEPTACLE	1 PC.	
D02		654509-0	CONNECTOR 2-SD	2 PC.	