1/2" (13MM) DRILL

MODEL DP4000

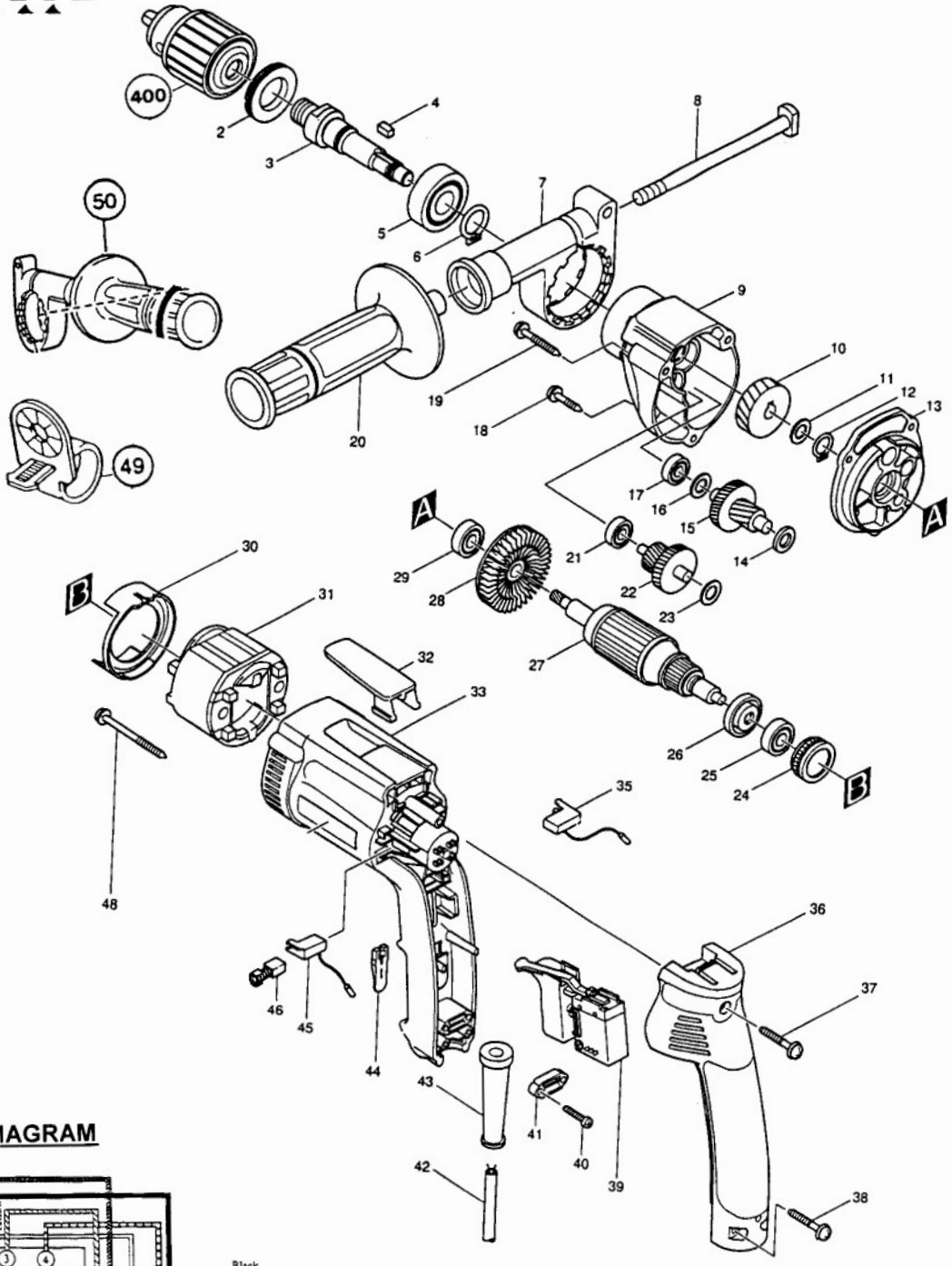

WIRING DIAGRAM

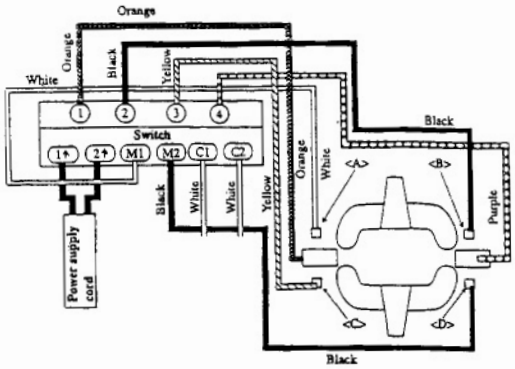

IMPORTANT! - To assure product **SAFETY** and **RELIABILITY**, repairs, maintenance or adjustment should be performed by **MAKITA** Service Centers, or other qualified service organizations . Always use **MAKITA** replacement parts.

01-01

Fig.	Part No.	Qty. Used	Description
2	285807-7	1	BEARING RETAINER 22-36
3	324039-2	1	SPINDLE
4	254202-2	1	KEY 4
5	211206-7	1	BALL BEARING 6202LLB
6	961055-9	1	RETAINING RING S-15
7	317401-8	1	GRIP BASE
8	266261-4	1	BOLT M8X130
9	317397-3	1	GEAR HOUSING
10	226529-0	1	HELICAL GEAR 26
11	267143-3	1	FLAT WASHER 11
12	961051-7	1	RETAINING RING S-11
13	152639-6	1	GEAR HOUSING COVER CPL. (INCL. 1 EA. NEEDLE BEARING 810 212004-2, 2 EA. NEEDLE BEARING 609 212016-5)
14	253804-1	1	FLAT WASHER 6
15	226136-9	1	GEAR COMPLETE 7-32
16	253133-2	1	FLAT WASHER 7
17	211021-9	1	BALL BEARING 607LLB
18	266050-7	1	TAPPING SCREW 4X30
19	266069-6	2	TAPPING SCREW 4X45
20	152521-9	1	GRIP 36 COMPLETE
21	211012-0	1	BALL BEARING 606ZZ
22	226137-7	1	GEAR COMPLETE 20-34
23	253804-1	1	FLAT WASHER 6
24	421479-6	1	RUBBER RING 19
25	211021-9	1	BALL BEARING 607LLB
26	681636-0	1	INSULATION WASHER
27	517356-9	1	ARMATURE ASS'Y 115V (INCL. FIG. 25,26,28,29)
28	241873-4	1	FAN 55
29	211031-6	1	BALL BEARING 608LLB
30	417356-8	1	BAFFLE PLATE
31	633466-5	1	FIELD 115V
32	417625-7	1	HOOK
33	183270-7	1	MOTOR HOUSING SET (INCL. FIG. 47)
35	643951-0	1	BRUSH HOLDER
36	152641-9	1	HANDLE COVER COMPLETE (INCL. 2 EA. RUBBER PIN 4 263002-9)
37	265999-8	1	TAPPING SCREW 4X25
38	265999-8	2	TAPPING SCREW 4X25
39	651991-4	1	SWITCH
40	265995-6	2	TAPPING SCREW 4X18
41	687063-9	1	STRAIN RELIEF
42	664064-4	1	P. SUPPLY CORD AWG#18-2-2
43	682559-5	1	CORD GUARD 8
44	417358-4	1	SLIDE LEVER
45	643948-9	1	BRUSH HOLDER
46	191927-6	1	CARBON BRUSH CB-407
48	266060-4	2	TAPPING SCREW 4X65
49	410102-8	1	KEY HOLDER
50	134903-7	1	GRIP ASS'Y (INCL. FIG. 7,8,20)

ACCESSORIES

400	193229-6	1	DRILL CHUCK S13
401	763434-5	1	CHUCK KEY 10