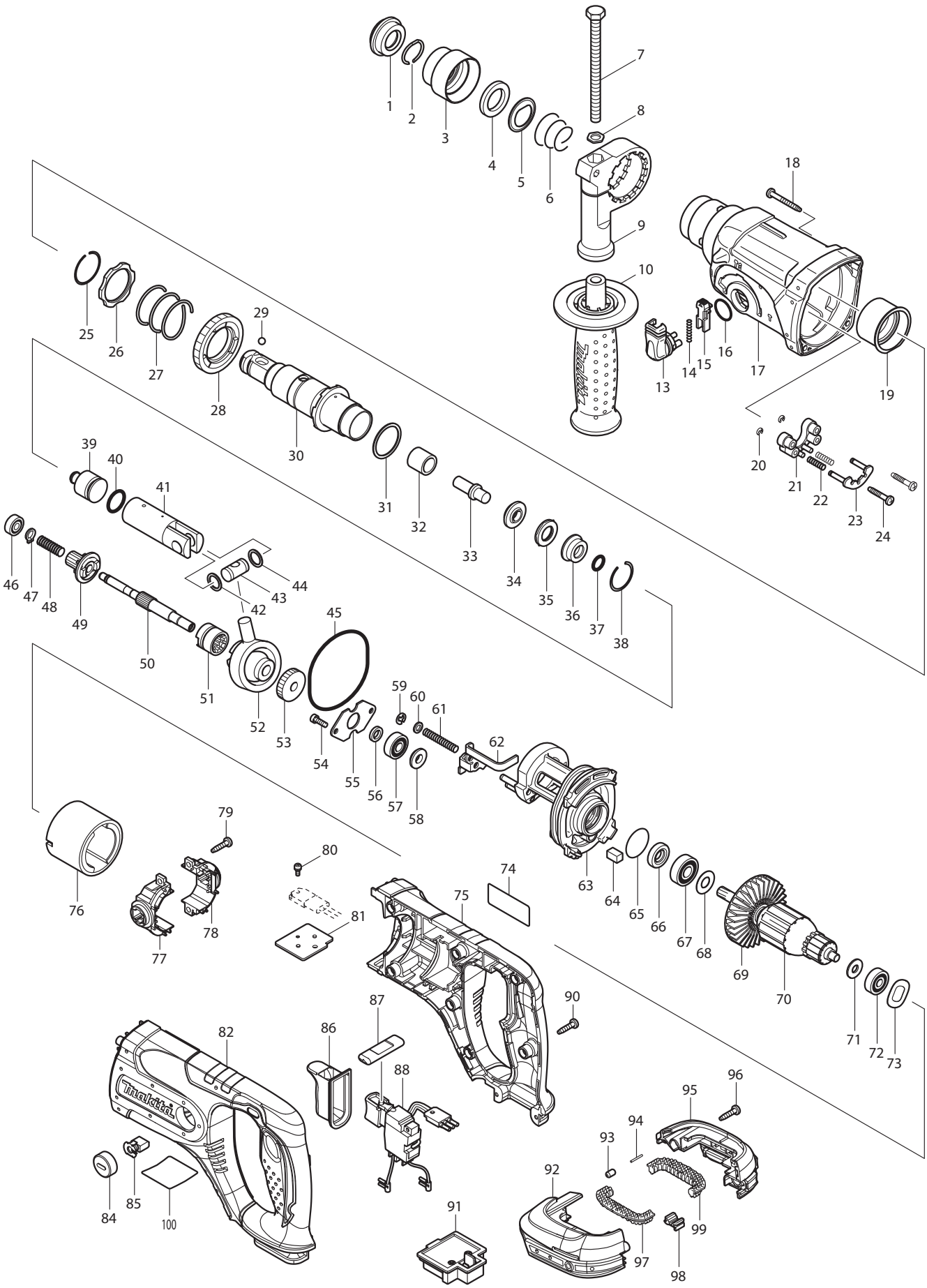
1
2
3
4
5
6
7
8
9
10
13
14
15
16
17
18
19
20
21
22
23
24
25
26
27
28
29
30
31
32
33
34
35
36
37
38
39
40
41
42
43
44
45
46
47
48
49
50
51
52
53
54
55
56
57
58
59
60
61
62
63
64
65
66
67
68
69
70
71
72
73
74
75
76
77
78
79
80
81
82
84
85
86
87
88
90
91
92
93
94
95
96
97
98
99
100

Model BHR241/BHR241Z Parts List

A = Standard Equipment
○= Circuit Diagram

Item#		Part#	Description	Q'ty	Unit
1		286263-4	CAP 35	1	PC.
2		233940-9	RING SPRING 19	1	PC.
3		417629-9	CHUCK COVER	1	PC.
4		257241-1	RING 21	1	PC.
5		345187-4	GUIDE WASHER	1	PC.
6		233916-6	CONICAL COMP. SPRING 21-29	1	PC.
7		921923-8	HEX. BOLT M8X120	1	PC.
8		345280-4	HEX. WASHER	1	PC.
9		417630-4	GRIP BASE	1	PC.
10		158057-6	GRIP 36 COMPLETE	1	PC.
	C10	931402-8	HEX. NUT M8	1	PC.
13		162245-9	CHANGE LEVER	1	PC.
14		233459-8	COMPRESSION SPRING 3	1	PC.
15		419192-8	LOCK BUTTON	1	PC.
16		213278-8	O RING 17	1	PC.
17		158216-2	GEAR HOUSING COMPLETE	1	PC.
	C10	213965-9	OIL SEAL 25	1	PC.
18		266351-3	TAPPING SCREW 4X35	4	PC.
19		153290-5	NEEDLE BEARING COMPLETE	1	PC.
20		961017-7	STOP RING E-3	2	PC.
21		417796-0	GUIDE BASE	1	PC.
22		233344-5	COMPRESSION SPRING 4	2	PC.
23		163430-7	LOCK PLATE COMPLETE	1	PC.
24		266374-1	TAPPING SCREW 4X25	2	PC.
25		233929-7	RING SPRING 29	1	PC.
26		267791-8	WASHER 31	1	PC.
27		233401-9	COMPRESSION SPRING 32	1	PC.
28		227109-5	SPUR GEAR 51	1	PC.
29		216022-2	STEEL BALL 7.0	1	PC.
30		158574-6	TOOL HOLDER COMPLETE	1	PC.
31		267229-3	FLAT WASHER 28	1	PC.
32		331769-8	SLEEVE 9	1	PC.
33		324669-9	IMPACT BOLT	1	PC.
34		324402-9	RING 10	1	PC.
35		421955-0	CUSHION RING 13	1	PC.
36		324216-6	O RING CASE	1	PC.
37		213073-6	O RING 9	1	PC.
38		233917-4	RING SPRING 28	1	PC.
39		324214-0	STRIKER	1	PC.
40		213227-5	O RING 16	1	PC.
41		318132-2	PISTON CYLINDER	1	PC.
42		267104-3	FLAT WASHER 12	1	PC.
43		324215-8	PISTON JOINT	1	PC.
44		267104-3	FLAT WASHER 12	1	PC.
45		213727-5	O-RING 63	1	PC.
46		211012-0	BALL BEARING 606ZZ	1	PC.
47		961003-8	RETAINING RING S-7	1	PC.
48		233343-7	COMPRESSION SPRING 7	1	PC.
49		227179-4	SPUR GEAR 10	1	PC.
50		324668-1	CAM SHAFT	1	PC.
51		331768-0	CLUTCH CAM	1	PC.

52	219014-0	SWASH BEARING 10	1 PC.	
53	226632-7	HELICAL GEAR 25	1 PC.	
54	266273-7	HEX. SOCKET HEAD BOLT M4X12	2 PC.	
55	345179-3	BEARING RETAINER	1 PC.	
56	267234-0	FLAT WASHER 8	1 PC.	
57	211032-4	BALL BEARING 608ZZ	1 PC.	
58	324212-4	RING 8	1 PC.	
59	961011-9	STOP RING E-4	1 PC.	
60	941102-2	FLAT WASHER 5	1 PC.	
61	233342-9	COMPRESSION SPRING 6	1 PC.	
62	345363-0	CHANGE PLATE	1 PC.	
63	158215-4	INNER HOUSING COMPLETE	1 PC.	
64	443126-9	FELT	1 PC.	
65	213407-3	O RING 26	1 PC.	
66	213077-8	OIL SEAL 10	1 PC.	
67	210059-1	BALL BEARING 6000DDW	1 PC.	
68	267213-8	FLAT WASHER 10	1 PC.	
69	240092-9	FAN 64	1 PC.	
70	519226-8	ARMATURE ASS'Y 18V	1 PC.	
D10		INC. 67-69,71,72		
71	253823-7	FLAT WASHER 7	1 PC.	
72	210023-2	BALL BEARING 627DDW	1 PC.	
73	267816-8	WAVE WASHER 15	1 PC.	
74	865820-7	BHR241 NAME PLATE 24MM	1 PC.	
75	188577-6	HOUSING SET	1	
D10		INC. 82		
76	638020-0	YOKE UNIT	1 PC.	
77	643836-0	BRUSH HOLDER	1	
78	643837-8	BRUSH HOLDER	1	
79	266326-2	TAPPING SCREW 4X18	2 PC.	
80	911006-2	PAN HEAD SCREW M3X8	1 PC.	
81	689070-8	HEAT SINK	1 PC.	
82	188577-6	HOUSING SET	1	
D10		INC. 75		
84	643829-7	HOLDER CAP	2 PC.	
85	194435-6	CARBON BRUSH CB441	1 PC.	
86	424111-1	SWITCH COVER	1 PC.	
87	450615-7	F/R CHANGE LEVER	1 PC.	
88	650587-8	SWITCH TG553FSB-7	1 PC.	
90	266326-2	TAPPING SCREW 4X18	7 PC.	
91	643838-6	TERMINAL	1 PC.	
92	188453-4	BATTERY HOUSING SET	1 SET	
93	263036-2	RUBBER PIN 5	1 PC.	
94	268184-2	PIN 1.5	1 PC.	
95	188453-4	BATTERY HOUSING SET	1 SET	
96	266326-2	TAPPING SCREW 4X18	2 PC.	
97	424042-4	CUSHION RUBBER	1 PC.	
98	424026-2	CUSHION	1 PC.	
99	424042-4	CUSHION RUBBER	1 PC.	
100	814973-9	BHR241 SERIAL NUMBER LABEL	1	
A01	324219-0	DEPTH GAUGE	1 PC.	
D01	652045-0	+PAN HEAD SCREW M3.5X5	1 PC.	
	BL1830	BATTERY 18V 3.0A	2	(BHR241 ONLY)
	DC18RA	CHARGER	1	(BHR241 ONLY)
	821016-X	TOOL BAG	1	(BHR241 ONLY)