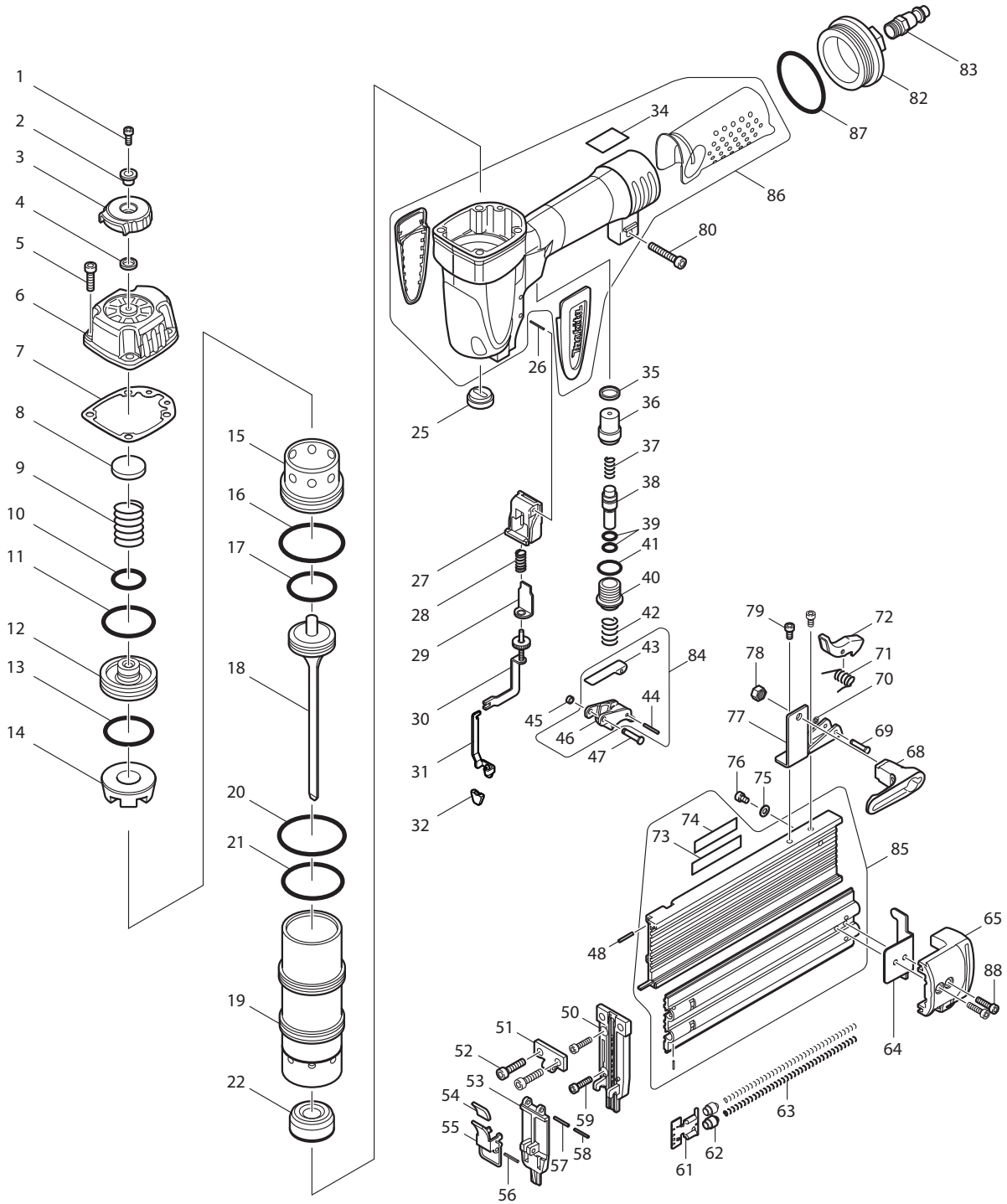
1
2
3
4
5
6
7
8
9
10
11
12
13
14
15
16
17
18
19
20
21
22
25
26
27
28
29
30
31
32
34
35
36
37
38
39
40
41
42
43
44
45
46
47
48
50
51
52
53
54
55
56
57
58
59
61
62
63
64
65
69
70
71
72
73
74
75
76
77
78
79
80
82
83
84
85
86
87
88

Model AF505N Parts List

A = Standard Equipment
〇= Circuit Diagram

Item#	Part#	Description	Q'ty	Unit
001	HY00000001	HEX.SOCKET HEAD BOLT M4X1	1	PC.
002	HY00000002	SLEEVE4	1	PC.
003	HY00000003	EXHAUST COVER	1	PC.
004	HY00000004	RUBBER WASHER 7	1	PC.
005	HY00000005	HEX.SOCKET HEAD BOLT M5X2	4	PC.
006	HY00000006	TOP CAP	1	PC.
007	HY00000007	TOP CAP GASKET	1	PC.
008	HY00000008	CUSHION V	1	PC.
009	HY00000009	COMPRESSION SPRING 7	1	PC.
010	HY00000010	O-RING 12	1	PC.
011	HY00000011	O-RING 33	1	PC.
012	HY00000012	HEAD VALVE	1	PC.
013	HY00000013	O-RING 29	1	PC.
014	HY00000014	CUSHION P	1	PC.
015	HY00000015	CYLINDER SEPARATER	1	PC.
016	HY00000016	O-RING 46	1	PC.
017	HY00000017	O-RING 24	1	PC.
018	HY00000018	DRIVER COMPLETE	1	PC.
019	HY00000019	CYLINDER	1	PC.
020	HY00000020	O-RING 36	2	PC.
021	HY00000021	O-RING 31	1	PC.
022	HY00000022	CUSHION F	1	PC.
025	HY00000023	FRONT SEAL	1	PC.
026	HY00000024	SPRING PIN 3-26	1	PC.
027	HY00000025	HOLDER	1	PC.
028	HY00000026	COMPRESSION SPRING 5	1	PC.
029	HY00000027	STOPPER	1	PC.
030	HY00000028	CONTACTARM COMPLETE	1	PC.
031	HY00000377	CONTACT TOP	1	
032	HY00000378	NOSE ADAPTER	1	
034	HY00000093	CAUTION LABEL	1	
035	HY00000033	RUBBER RING 8	1	PC.
036	HY00000034	TRIGGER VALVE GUIDE	1	PC.
037	HY00000035	COMPRESSION SPRING 4	1	PC.
038	HY00000036	TRIGGER VALVE STEM	1	PC.
039	HY00000037	O-RING 3	2	PC.
040	HY00000038	TRIGGER VALVE CASE	1	PC.
041	HY00000039	O-RING 11	1	PC.
042	HY00000040	COMPRESSION SPRING 10	1	PC.
043	HY00000041	IDLER	1	PC.
044	HY00000042	SPRING PIN 2.5-17	1	PC.
045	HY00000043	RUBBER RING 2	1	PC.
046	HY00000044	TRIGGER	1	PC.
047	HY00000045	PIN 3	1	PC.
048	HY00000046	PIN 2	2	PC.
050	HY00000047	DRIVER GUIDE	1	PC.
051	HY00000048	PLATE	1	PC.
052	HY00000049	HEX.SOCKET HEAD BOLT M5X2	2	PC.
053	HY00000050	DOOR	1	PC.
054	HY00000051	CAP	1	PC.

055		HY00000052	LEVER COMPLETE	1 PC.
056		HY00000053	SPRING PIN 2.5-16	1 PC.
057		HY00000054	SPRING PIN 2.5-18	1 PC.
058		HY00000055	SPRING PIN 1.5-18	1 PC.
059		HY00000056	HEX.SOCKET HEAD BOLT M4X1	4 PC.
061		HY00000057	PUSHER	1 PC.
062		HY00000058	PIN 7	2 PC.
063		HY00000059	COMPRESSION SPRING 6	2 PC.
064		HY00000060	MAGAZINE PLATE	1 PC.
065		HY00000061	SLIDE DOOR COVER	1 PC.
068		HY00000062	HOOK	1 PC.
069		HY00000063	PIN 3	1 PC.
070		HY00000064	STOP RING (EXT) E-2.5	1 PC.
071		HY00000065	TORSION SPRING	1 PC.
072		HY00000066	LOCK LEVER	1 PC.
073		HY00000067	CAUTION LABEL	1 PC.
074		HY00000069	CAUTION LABEL	1 PC.
075		HY00000070	WASHER	1 PC.
076		HY00000071	HEX.SOCKET HEAD BOLT M4X6	1 PC.
077		HY00000072	JOINT	1 PC.
078		HY00000073	HEX.LOCK NUT M5	1 PC.
079		HY00000074	HEX.SOCKET HEAD BOLT M4X8	2 PC.
080		HY00000075	HEX.SOCKET HEAD BOLT M5X3	1 PC.
082		HY00000076	INLET CAP	1 PC.
083		HY00000079	ONE TOUCH JOINT	1 PC.
084		HY00000083	TRIGGER COMPLETE (43 44 46)	1 PC.
	D10		INC. 43,44,46	
085		HY00000084	MAGAZING ASSY	1 PC.
	D10		INC. 73,74	
086		HY00000087	HOUSING COMPLETE	1 PC.
	D10		INC. 34	
087		HY00000020	O-RING 36	1 PC.
088		HY00000056	HEX.SOCKET HEAD BOLT M4X1	4 PC.
A01		HY00000090	PLASTIC CASE	1 PC.
A02		195246-2	SAFETY GOGGLE	1 PC.
A03		181434-7	OIL SUPPLY 30CC	1 PC.